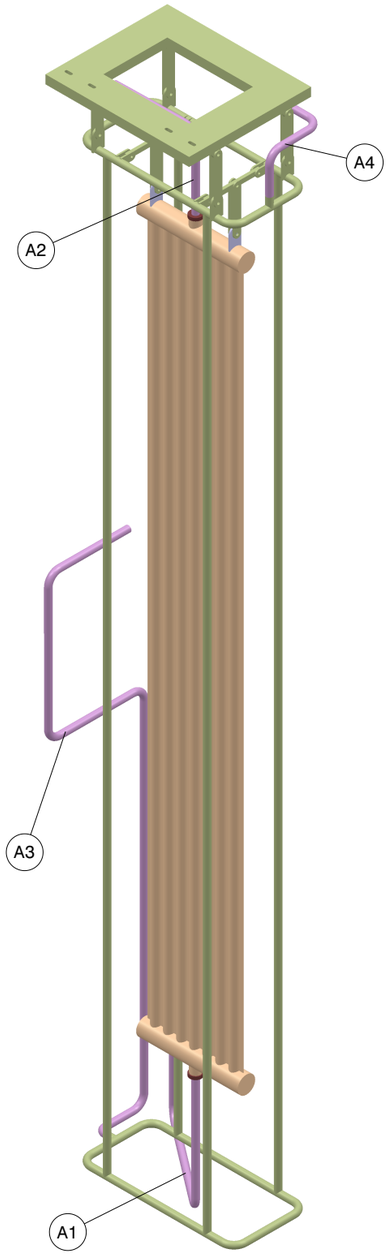


Isometric view
CHEVRONS ARE NOT SHOWN HERE

PART-1

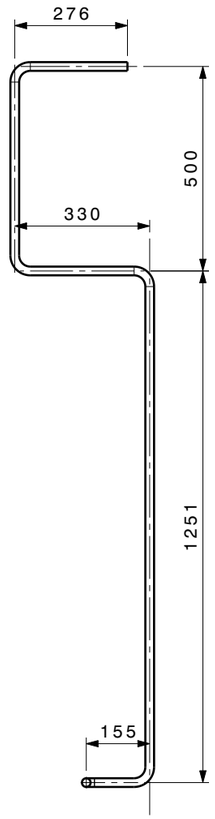


Front view

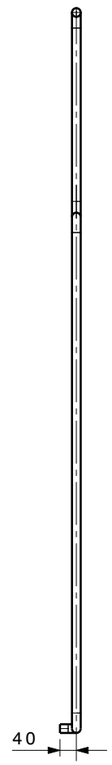


Right view

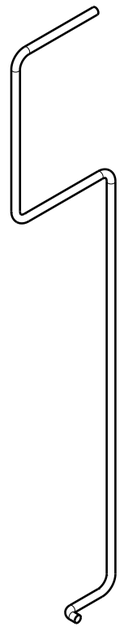

Isometric view[4]

## A3: NITROGEN SUPPLY BRANCH

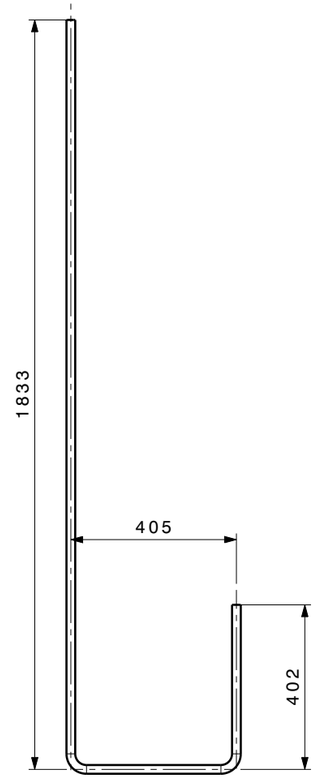


Front view

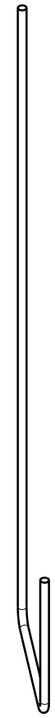

Isometric view[3]

## A1: HELIUM SUPPLY BRANCH

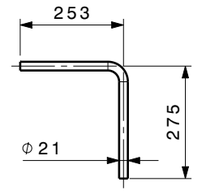


Front view

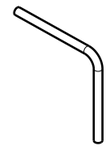

Isometric view[5]

## A2: HELIUM RETURN BRANCH

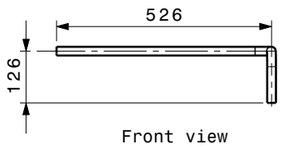


Front view

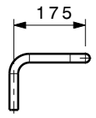


Right view

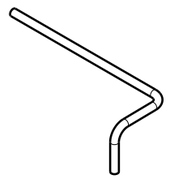

Isometric view[2]

## A4: NITROGEN RETURN BRANCH

| Sr. No. | NOTE |
|---|---|
| 5 | PIPE SIZE FOR THE BRANCH LINE: NB ½" SCH. 10S **(MATEREIAL: SS304L)** |
| 4 | ALL BRANCH PIPES, BENDS AND BRAIDED HOSES GIVEN AS FREE ISSUE MATERIAL |
| 3 | THE DRAWINGS SHOWN IN THIS SHEET, ARE FOR THE SAKE OF UNDERSTANDING |
| 2 | THE SCOPE OF SUPPLY FROM THE VENDOR IS AS LISTED IN THE BOM IF MENTIONED |
| 1 | METALIC BRAIDED HOSES MAY BE USED AS PER REQUIREMENT IN THE BRANCH LINE. |

| DRG.NO | ▽ 8-25 | ▽▽ 1.6-8 | ▽▽▽ 0.025-1.6 | ▽▽▽▽ < 0.025 |
|---|---|---|---|---|
| CO-ORDINATED BY | | | | |

MACHINING DEVIATIONS FOR NON-TOLERANCED DIMENSIONS

| LENGTH IN mm OF SHORTER SIDE OF ANGLES | | | | LENGTH OR DIA | UPTO 6 | 6-30 | 30-120 | 120-315 |
|---|---|---|---|---|---|---|---|---|
| UPTO 10 | 10-50 | 50-120 | OVER 120-400 | | | | | |
| ±1° | ±0°-30' | ±0°-20' | ±0°-10' | | ±0.1 | ±0.2 | ±0.3 | ±0.5 |

REVISION COLUMN

| REV | ZONE | DESCRIPTION | DATE | REMARKS | APPROVED BY |
|---|---|---|---|---|---|
| | | | | | |

| NBI GROUP: | SIZE A3 |
|---|---|
| ALL DIMENSIONS ARE IN `mm' UNLESS OTHERWISE STATED | |

INSTITUTE FOR PLASMA RESEARCH
BHAT, GANDHINAGAR-382 428.

| SCALE | NTS | DATE |
|---|---|---|
| DRAWN | A.R.K. | |
| CHECKED | | |
| APPROVED | | |

THIRD ANGLE PROJECTION

TITLE
CRYOPUMP-1 CASSETE (L.H. / R.H.)DETAIL

REF DRG NO:

REV 00

DRG.NO 2.04.02.028

SHEET 2 OF 5

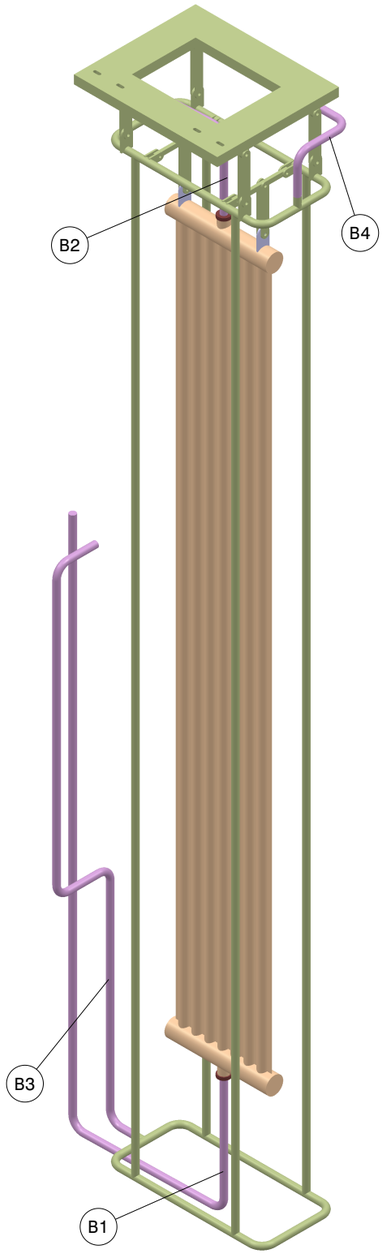


Isometric view
CHEVRONS ARE NOT SHOWN HERE

PART-2

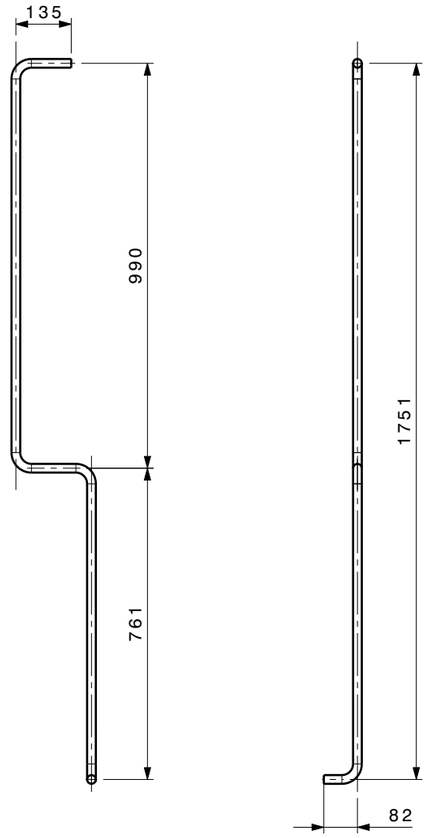


Front view

Right view

B3: NITROGEN SUPPLY BRANCH

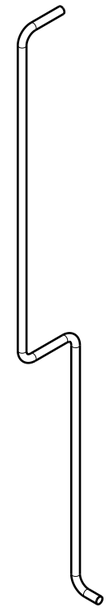

Isometric view

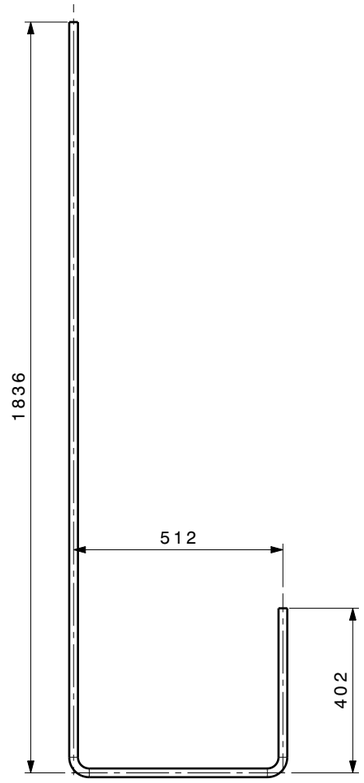


Front view

Isometric view

B1: HELIUM SUPPLY BRANCH

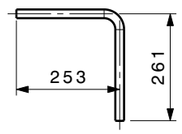


Front view

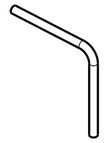

Isometric view

B2: HELIUM RETURN BRANCH

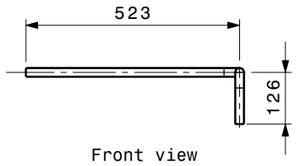


Front view

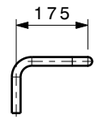


Right view

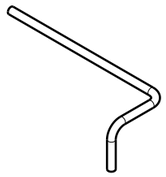

Isometric view

B4: NITROGEN RETURN BRANCH

| Sr. No. | NOTE |
|---|---|
| 5 | PIPE SIZE FOR THE BRANCH LINE: NB ½" SCH. 10S **(MATEREIAL: SS304L)** |
| 4 | ALL BRANCH PIPES, BENDS AND BRAIDED HOSES GIVEN AS FREE ISSUE MATERIAL |
| 3 | THE DRAWINGS SHOWN IN THIS SHEET, ARE FOR THE SAKE OF UNDERSTANDING |
| 2 | THE SCOPE OF SUPPLY FROM THE VENDOR IS AS LISTED IN THE BOM IF MENTIONED |
| 1 | METALIC BRAIDED HOSES MAY BE USED AS PER REQUIREMENT IN THE BRANCH LINE. |

| DRG.NO | ▽ 8-25 | ▽▽ 1.6-8 | ▽▽▽ 0.025-1.6 | ▽▽▽▽ < 0.025 |
|---|---|---|---|---|
| CO-ORDINATED BY | | | | |

MACHINING DEVIATIONS FOR NON-TOLERANCED DIMENSIONS

| LENGTH IN mm OF SHORTER SIDE OF ANGLES | | | | LENGTH OR DIA | UPTO 6 | 6-30 | 30-120 | 120-315 |
|---|---|---|---|---|---|---|---|---|
| UPTO 10 | 10-50 | 50-120 | OVER 120-400 | | | | | |
| ±1° | ±0°-30' | ±0°-20' | ±0°-10' | | ±0.1 | ±0.2 | ±0.3 | ±0.5 |

REVISION COLUMN

| REV | ZONE | DESCRIPTION | DATE | REMARKS | APPROVED BY |
|---|---|---|---|---|---|
| | | | | | |
| | | | | | |
| | | | | | |

| NBI GROUP: | | SIZE A3 |
|---|---|---|
| ALL DIMENSIONS ARE IN `mm' UNLESS OTHERWISE STATED | | |
| SCALE | NTS | DATE |
| DRAWN | A.R.K. | |
| CHECKED | | |
| APPROVED | | |

INSTITUTE FOR PLASMA RESEARCH
BHAT, GANDHINAGAR-382 428.

THIRD ANGLE PROJECTION

TITLE
CRYOPUMP-2 CASSETE (L.H. / R.H.)DETAIL

REF DRG NO:

REV 00

DRG.NO 2.04.02.028

SHEET 3 OF 5

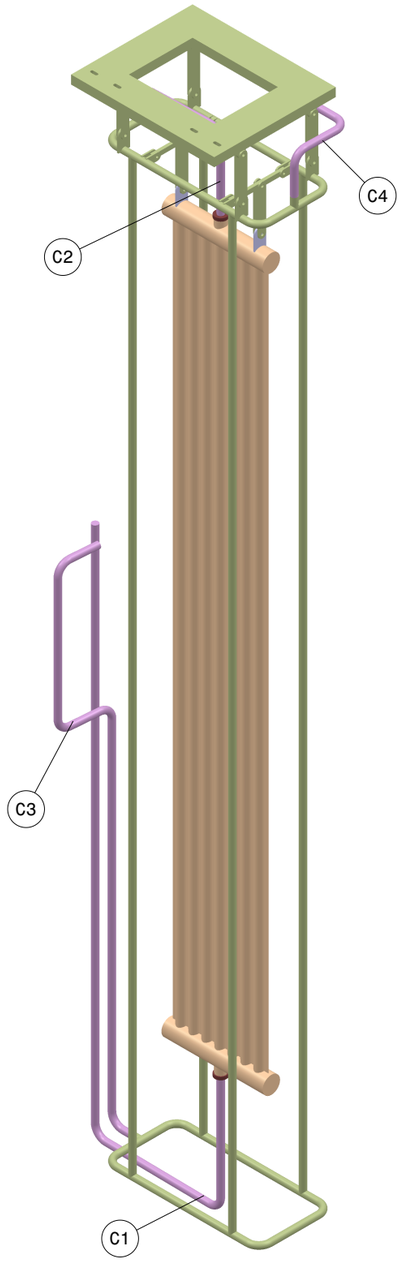


Isometric view
CHEVRONS ARE NOT SHOWN HERE

PART-3

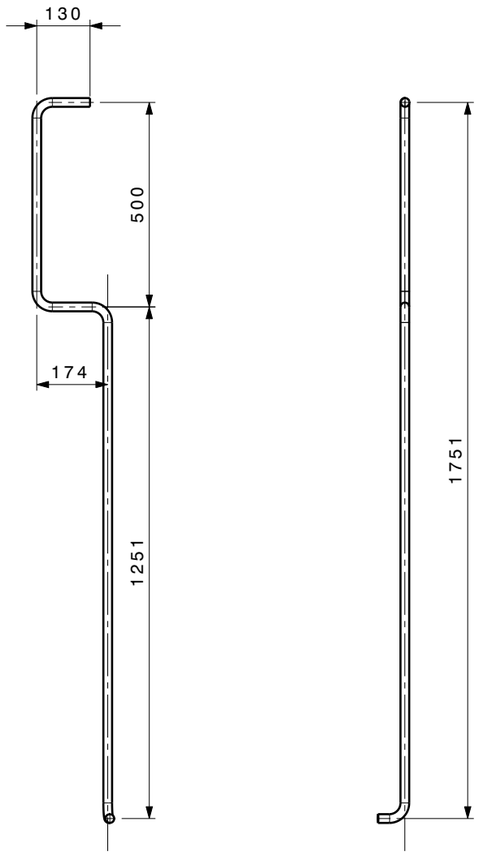


Front view

Right view

Isometric view

## C3: NITROGEN SUPPLY BRANCH

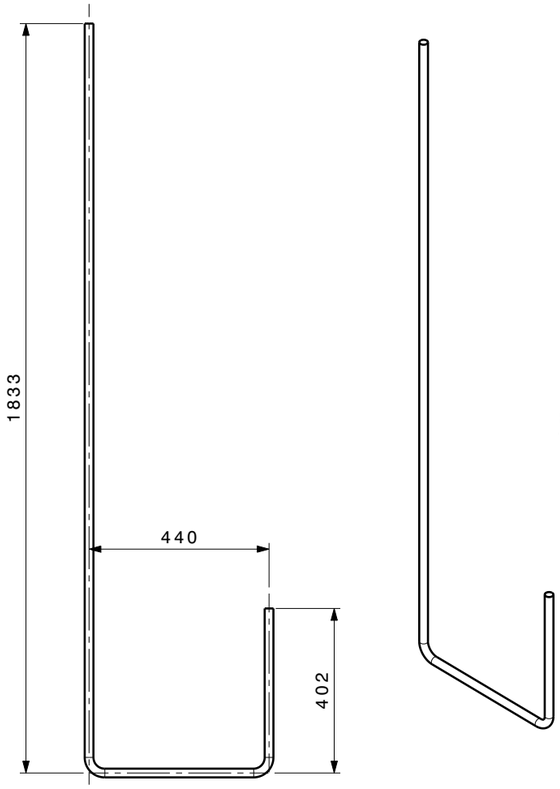


Front view

Isometric view

## C1: HELIUM SUPPLY BRANCH

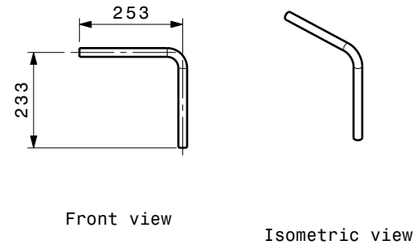


Front view

Isometric view

## C2: HELIUM RETURN BRANCH

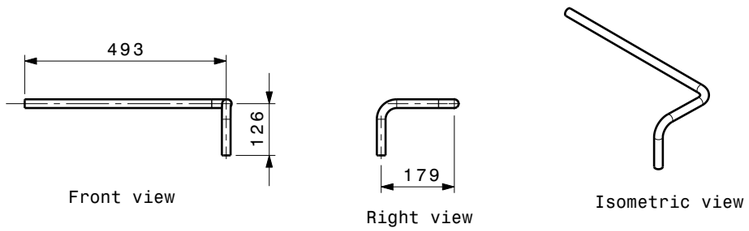


Front view

Right view

Isometric view

## C4: NITROGEN RETURN BRANCH

| Sr. No. | NOTE |
|---|---|
| 5 | PIPE SIZE FOR THE BRANCH LINE: NB ½" SCH. 10S **(MATEREIAL: SS304L)** |
| 4 | ALL BRANCH PIPES, BENDS AND BRAIDED HOSES GIVEN AS FREE ISSUE MATERIAL |
| 3 | THE DRAWINGS SHOWN IN THIS SHEET, ARE FOR THE SAKE OF UNDERSTANDING |
| 2 | THE SCOPE OF SUPPLY FROM THE VENDOR IS AS LISTED IN THE BOM IF MENTIONED |
| 1 | METALIC BRAIDED HOSES MAY BE USED AS PER REQUIREMENT IN THE BRANCH LINE. |

| | | | |
|---|---|---|---|
| DRG.NO | ▽ 8-25 | ▽▽ 1.6-8 | ▽▽▽ 0.025-1.6 ▽▽▽▽ < 0.025 |
| CO-ORDINATED BY | | | |

MACHINING DEVIATIONS FOR NON-TOLERANCED DIMENSIONS

| LENGTH IN mm OF SHORTER SIDE OF ANGLES | | | | LENGTH OR DIA | UPTO 6 | 6-30 | 30-120 | 120-315 |
|---|---|---|---|---|---|---|---|---|
| UPTO 10 | 10-50 | 50-120 | OVER 120-400 | | | | | |
| ±1° | ±0°-30' | ±0°-20' | ±0°-10' | | ±0.1 | ±0.2 | ±0.3 | ±0.5 |

REVISION COLUMN

| REV | ZONE | DESCRIPTION | DATE | REMARKS | APPROVED BY |
|---|---|---|---|---|---|
| | | | | | |

| | | |
|---|---|---|
| NBI GROUP: | | SIZE A3 |
| ALL DIMENSIONS ARE IN `mm' UNLESS OTHERWISE STATED | | |
| SCALE | NTS | DATE |
| DRAWN | A.R.K. | |
| CHECKED | | |
| APPROVED | | |

INSTITUTE FOR PLASMA RESEARCH
BHAT, GANDHINAGAR-382 428.

THIRD ANGLE PROJECTION

TITLE
CRYOPUMP-3 CASSETE (L.H. / R.H.)DETAIL

REF DRG NO:

REV 00

DRG.NO 2.04.02.028

SHEET 4 OF 5

Isometric view
CHEVRONS ARE NOT SHOWN HERE

## PART-4

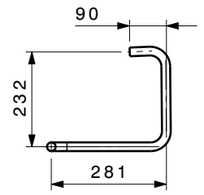


Top view

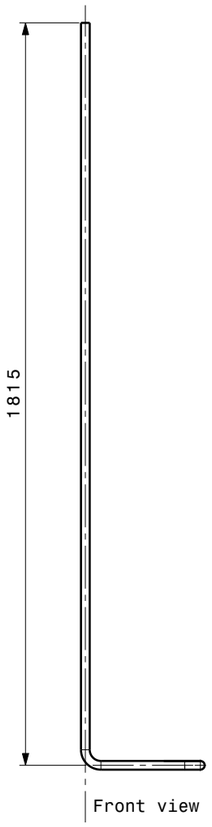


Front view

Isometric view

## D3: NITROGEN SUPPLY BRANCH

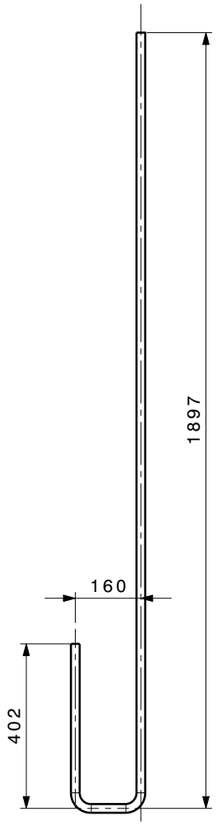


Front view

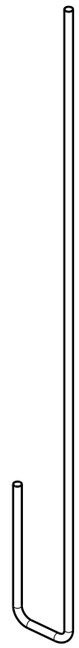

Isometric view

## D1: HELIUM SUPPLY BRANCH

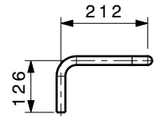


Left view
Scale: 1:15

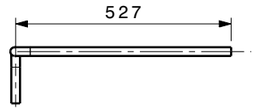


Front view
Scale: 1:15

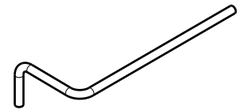

Isometric view
Scale: 1:15

## D4: NITROGEN RETURN BRANCH

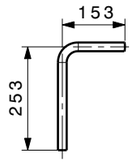


Front view
Scale: 1:15

Isometric view
Scale: 1:15

## D2: HELIUM RETURN BRANCH

| Sr. No. | NOTE |
|---|---|
| 5 | PIPE SIZE FOR THE BRANCH LINE: NB ½" SCH. 10S **(MATEREIAL: SS304L)** |
| 4 | ALL BRANCH PIPES, BENDS AND BRAIDED HOSES GIVEN AS FREE ISSUE MATERIAL |
| 3 | THE DRAWINGS SHOWN IN THIS SHEET, ARE FOR THE SAKE OF UNDERSTANDING |
| 2 | THE SCOPE OF SUPPLY FROM THE VENDOR IS AS LISTED IN THE BOM IF MENTIONED |
| 1 | METALIC BRAIDED HOSES MAY BE USED AS PER REQUIREMENT IN THE BRANCH LINE. |

| DRG.NO | ▽ 8-25 | ▽▽ 1.6-8 | ▽▽▽ 0.025-1.6 | ▽▽▽▽ < 0.025 |
|---|---|---|---|---|
| CO-ORDINATED BY | | | | |

MACHINING DEVIATIONS FOR NON-TOLERANCED DIMENSIONS

| LENGTH IN mm OF SHORTER SIDE OF ANGLES | | | | LENGTH OR DIA | UPTO 6 | 6-30 | 30-120 | 120-315 |
|---|---|---|---|---|---|---|---|---|
| UPTO 10 | 10-50 | 50-120 | OVER 120-400 | | | | | |
| ±1° | ±0°-30' | ±0°-20' | ±0°-10' | | ±0.1 | ±0.2 | ±0.3 | ±0.5 |

REVISION COLUMN

| REV | ZONE | DESCRIPTION | DATE | REMARKS | APPROVED BY |
|---|---|---|---|---|---|
| | | | | | |

| NBI GROUP: | SIZE A3 |
|---|---|
| ALL DIMENSIONS ARE IN `mm' UNLESS OTHERWISE STATED | |

INSTITUTE FOR PLASMA RESEARCH
BHAT, GANDHINAGAR-382 428.

| SCALE | NTS | DATE |
|---|---|---|
| DRAWN | A.R.K. | |
| CHECKED | | |
| APPROVED | | |

THIRD ANGLE PROJECTION

TITLE
CRYOPUMP-4 CASSETE (L.H. / R.H.)DETAIL

REF DRG NO:

REV 00

DRG.NO 2.04.02.028

SHEET 5 OF 5

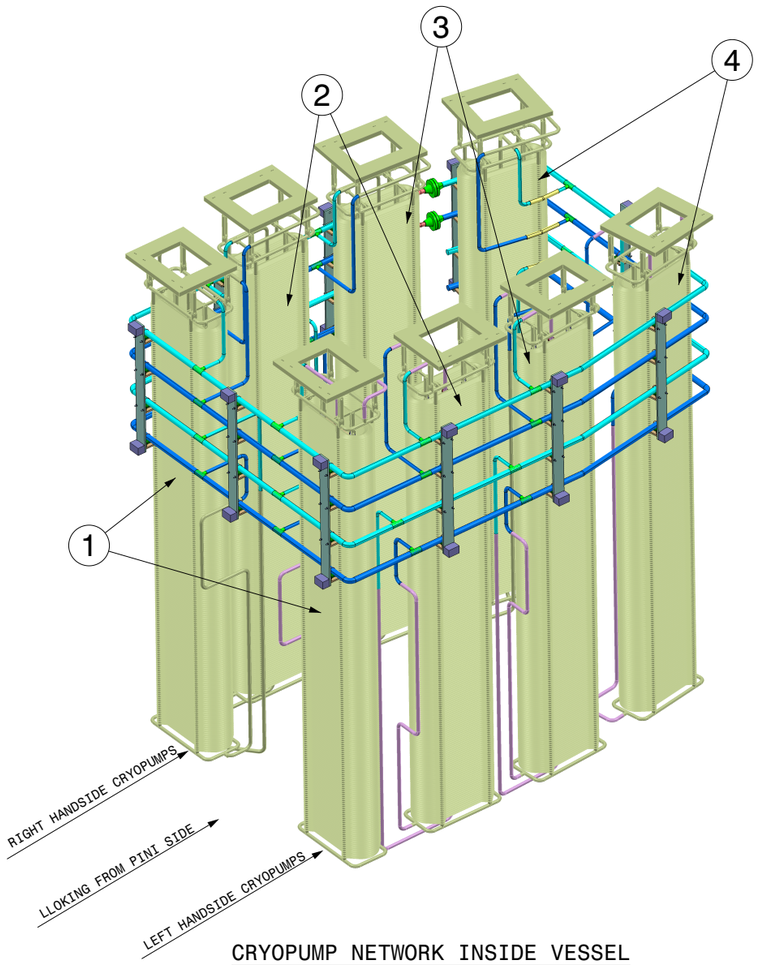


CRYOPUMP NETWORK INSIDE VESSEL

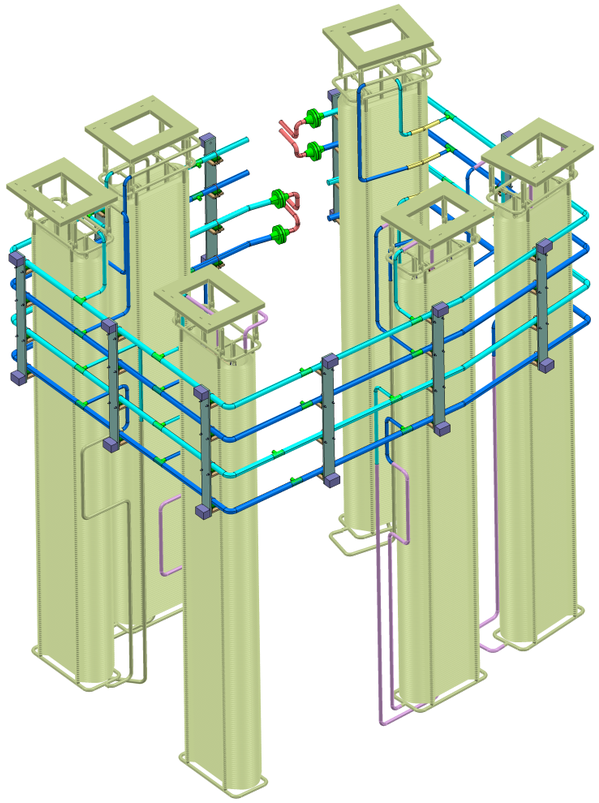

EXPECTED CRYOGENIC NETWORK WITH SIX CRYOPUMPS

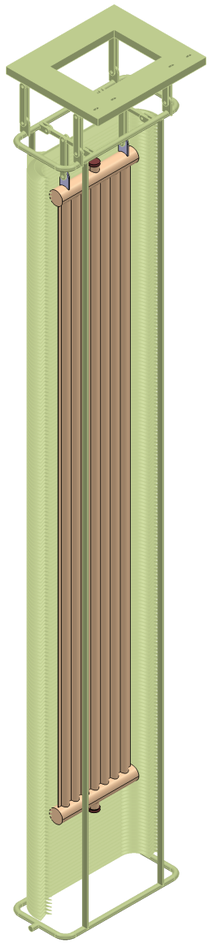

CRYOPUMP (CUT-SECTION)

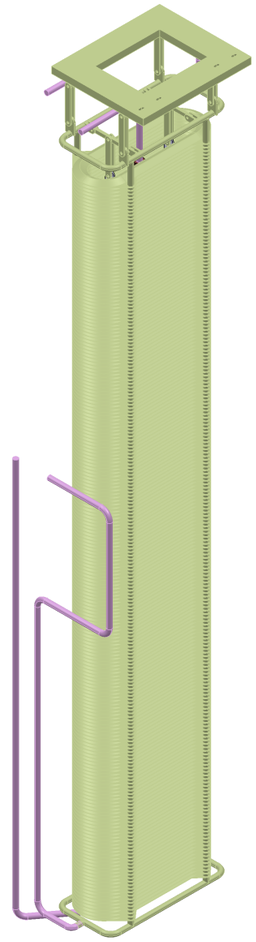

CRYOPUMP CASSETE

NOTE:-

1. L.H. SIDE CRYOPUMPS ARE IDENTICAL WITH R.H. SIDE CRYOPUMPS.

FREE ISSUE MATERIAL:-

- CRYOPUMPS, PIPES & FITINGS FOR HEADER AND BRANCH ROUTE.

| PART NO. | DESCRIPTION | QTY. | REMARKS |
|---|---|---|---|
| 4 | CRYOPUMP-4 CASSETE BODY(L.H.S.\ R.H.S.) | 2 | |
| 3 | CRYOPUMP-3 CASSETE BODY(L.H.S.\ R.H.S.) | 2 | |
| 2 | CRYOPUMP-2 CASSETE BODY(L.H.S.\ R.H.S.) | 2 | |
| 1 | CRYOPUMP-1 CASSETE BODY(L.H.S.\ R.H.S.) | 2 | |

| DRG.NO | ▽ 8-25 | ▽▽ 1.6-8 | ▽▽▽ 0.025-1.6 | ▽▽▽▽ < 0.025 |
|---|---|---|---|---|
| CO-ORDINATED BY | | | | |

MACHINING DEVIATIONS FOR NON-TOLERANCED DIMENSIONS

| LENGTH IN mm OF SHORTER SIDE OF ANGLES | | | | LENGTH OR DIA | UPTO 6 | 6-30 | 30-120 | 120-315 |
|---|---|---|---|---|---|---|---|---|
| UPTO 10 | 10-50 | 50-120 | OVER 120-400 | | | | | |
| ±1° | ±0°-30' | ±0°-20' | ±0°-10' | | ±0.1 | ±0.2 | ±0.3 | ±0.5 |

REVISION COLUMN

| REV | ZONE | DESCRIPTION | DATE | REMARKS | APPROVED BY |
|---|---|---|---|---|---|
| | | | | | |
| | | | | | |
| | | | | | |

| NBI GROUP: | SIZE A3 |
|---|---|
| ALL DIMENSIONS ARE IN `mm' UNLESS OTHERWISE STATED | |

| SCALE | NTS | DATE |
|---|---|---|
| DRAWN | A.R.K. | |
| CHECKED | | |
| APPROVED | | |

INSTITUTE FOR PLASMA RESEARCH
BHAT, GANDHINAGAR-382 428.

THIRD ANGLE PROJECTION

TITLE
CRYOPUMP NETWORK ASSY.

REF DRG NO:

REV 00

DRG.NO 2.04.02.028

SHEET 1 OF 5

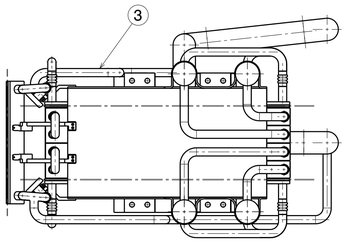


Top view
Scale: 1:10

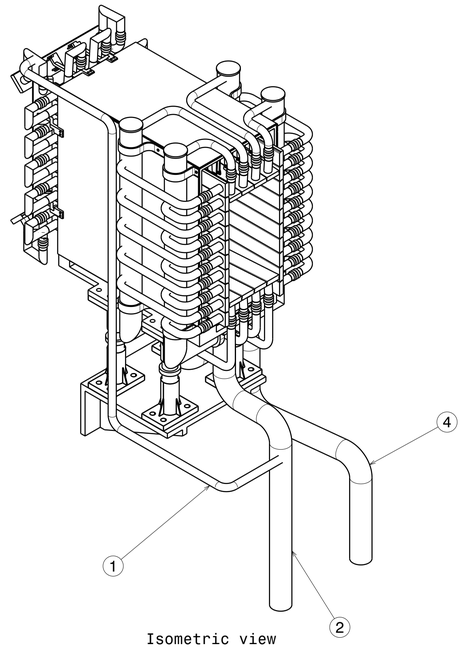


Isometric view
Scale: 1:10

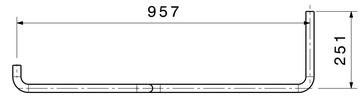


Top view
Scale: 1:10

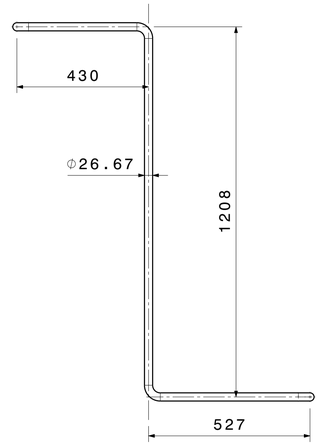


Front view
Scale: 1:10

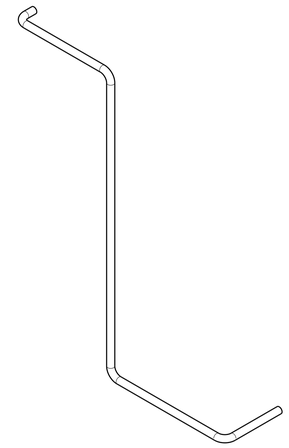

Isometric view
Scale: 1:10

1 .INLET-1

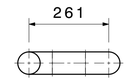


Top view
Scale: 1:10

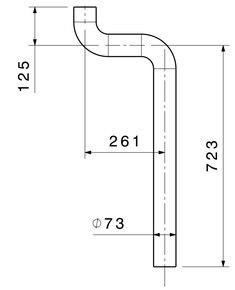


Front view
Scale: 1:10

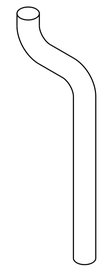

Isometric view
Scale: 1:10

2 .INLET-2

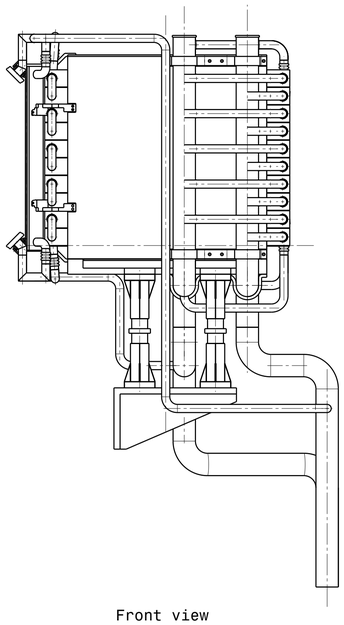

Front view
Scale: 1:10

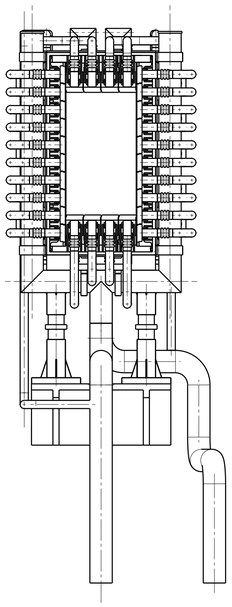

Right view
Scale: 1:10

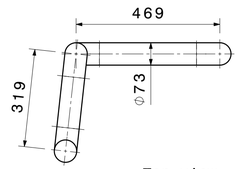


Top view
Scale: 1:10

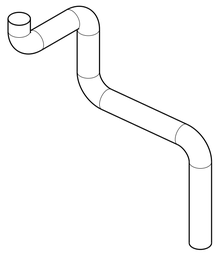

Isometric view
Scale: 1:10

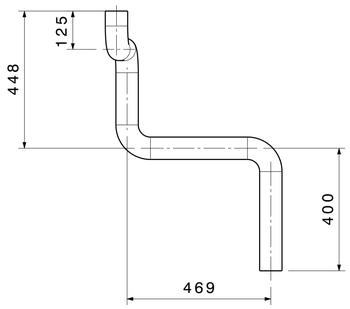


Front view
Scale: 1:10

4 .OUTLET-2

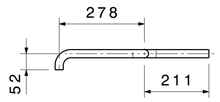


Top view
Scale: 1:10

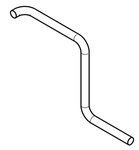

Isometric view
Scale: 1:10

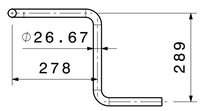


Front view
Scale: 1:10

3 .OUTLET-1

NOTE:

| | |
|---|---|
| 1 | THE DRAWINGS SHOWN IN THIS SHEET, ARE FOR THE SAKE OF UNDERSTANDING ONLY FOR THE VENDORS. |
| 2 | ALL PIPES ARE OF SCH.10S. |
| 3 | REQUIRED PIPES & BENDS ARE FREE ISSUE OF MATERIAL. |

| | | | | |
|---|---|---|---|---|
| DRG.NO | ▽ 8-25 | ▽▽ 1.6-8 | ▽▽▽ 0.025-1.6 | ▽▽▽▽ < 0.025 |
| CO-ORDINATED BY | | | | |

MACHINING DEVIATIONS FOR NON-TOLERANCED DIMENSIONS

| LENGTH IN mm OF SHORTER SIDE OF ANGLES | | | | LENGTH OR DIA | UPTO 6 | 6-30 | 30-120 | 120-315 |
|---|---|---|---|---|---|---|---|---|
| UPTO 10 | 10-50 | 50-120 | OVER 120-400 | | | | | |
| ±1' | ±0°-30' | ±0°-20' | ±0°-10' | | ±0.1 | ±0.2 | ±0.3 | ±0.5 |

| REV | ZONE | DESCRIPTION | DATE | REMARKS | APPROVED BY |
|---|---|---|---|---|---|
| | | | | | |
| | | | | | |
| | | | | | |

REVISION COLUMN

NBI GROUP: | SIZE A3

ALL DIMENSIONS ARE IN 'mm' UNLESS OTHERWISE STATED

INSTITUTE FOR PLASMA RESEARCH
BHAT, GANDHINAGAR-382 428.

| | | |
|---|---|---|
| SCALE | - | DATE |
| DRAWN | ARK | - |
| DESIGNED | | |
| APPROVED | | |

THIRD ANGLE PROJECTION

TITLE: NEUTRILIZER ASSY.& DETAILS

REF DRG NO: | REV R0

DRG.NO 2.04.02.029 | SHEET 01 OF 01

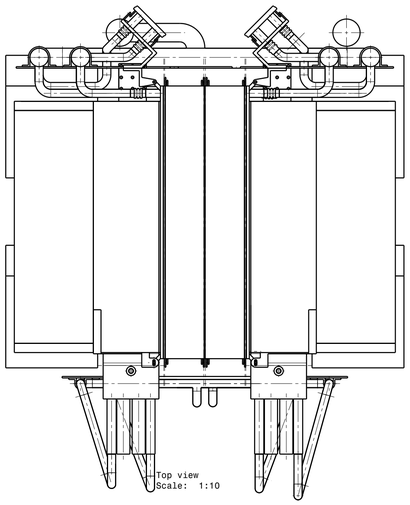

Top view
Scale: 1:10

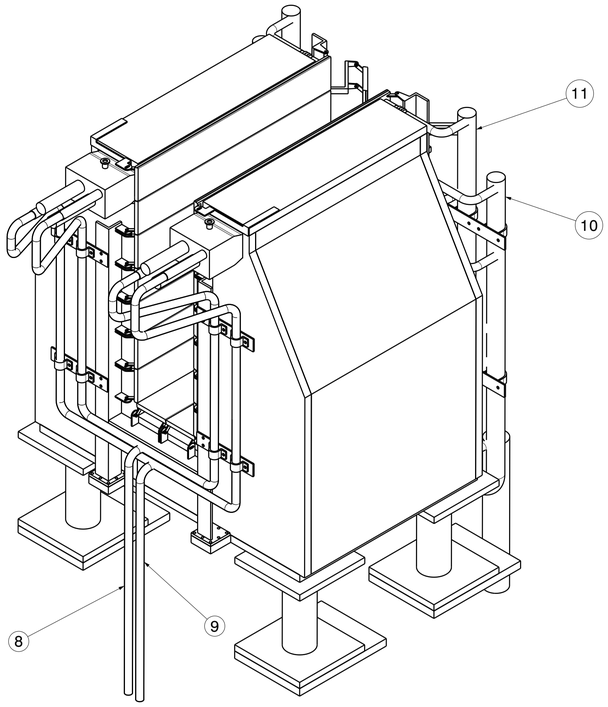


Isometric view
Scale: 1:10

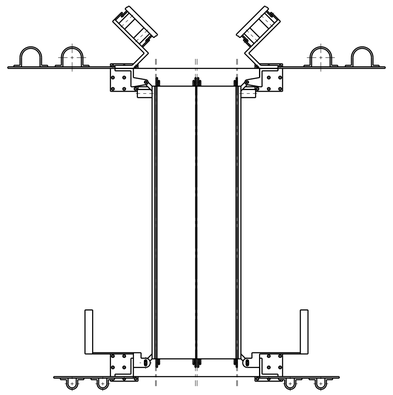

Top view
Scale: 1:10

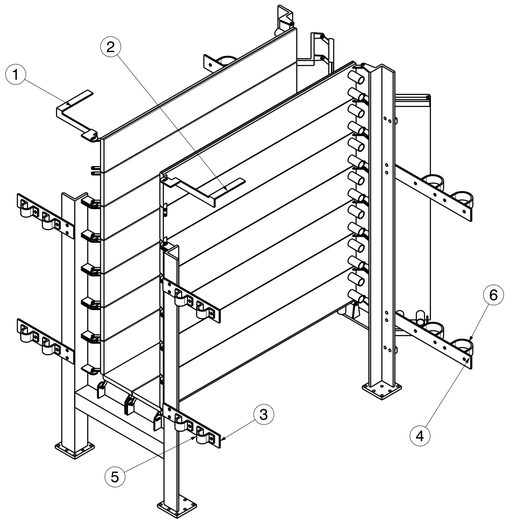


Isometric view
Scale: 1:10

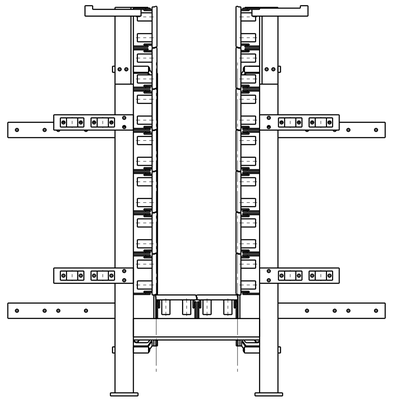

Front view
Scale: 1:10

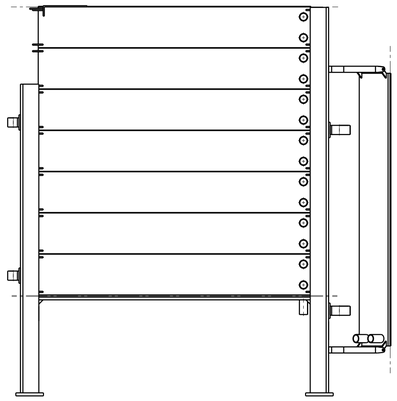

Right view
Scale: 1:10

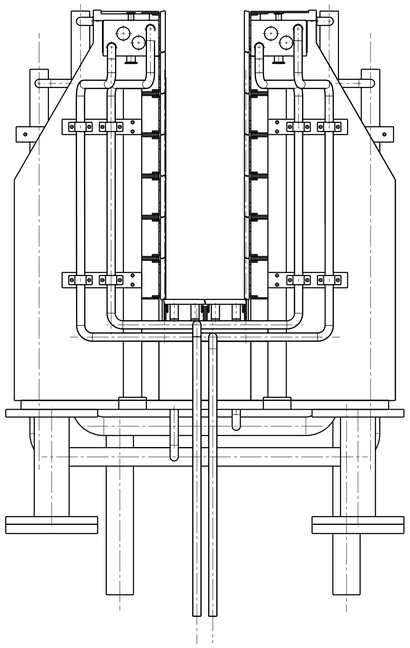

Front view
Scale: 1:10

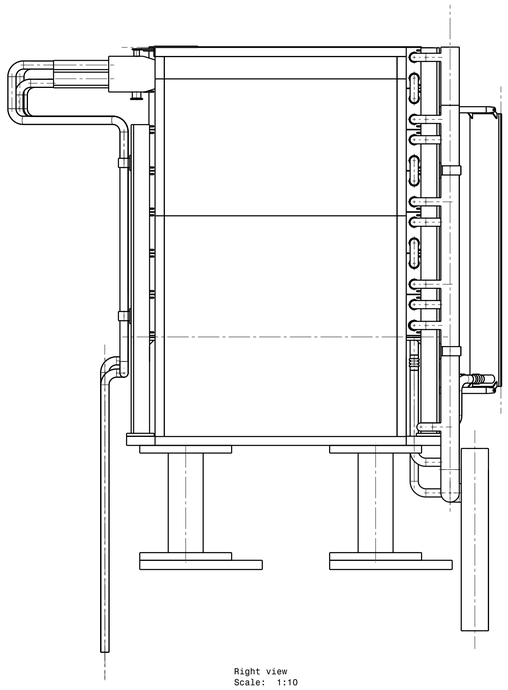

Right view
Scale: 1:10

| NOTE: | |
|---|---|
| 1 | THE DRAWINGS SHOWN IN THIS SHEET, ARE FOR THE SAKE OF UNDERSTANDING ONLY FOR THE VENDORS. |
| 2 | THE SCOPE OF SUPPLY FROM THE VENDOR IS AS LISTED IN THE BOM. |
| 3 | ALL PIPES ARE OF SCH.10S. |
| 4 | REQUIRED PIPES & BENDS ARE FREE ISSUE OF MATERIAL. |

| PART NO. | DESCRIPTION | MATERIAL | QTY. | REMARKS |
|---|---|---|---|---|
| 1 | TOP DUAL HTE SUPPORT-1 | SS 304 | 1 | |
| 2 | TOP DUAL HTE SUPPORT-2 | SS 304 | 1 | |
| 3 | CLAMP SUPPORT-1 | SS 304 | 4 | |
| 4 | CLAMP SUPPORT-2 | SS 304 | 4 | |
| 5 | CLAMP-1 | SS 304 | 8 | |
| 6 | CLAMP-2 | SS 304 | 8 | |
| 7 | BOLT-NUT FOR CLAMPS & HTE | SS 304 | - | AS PER REQ. |

| | | | | |
|---|---|---|---|---|
| DRG.NO | ▽ 8-25 | ▽▽ 1.6-8 | ▽▽▽ 0.025-1.6 | ▽▽▽▽ < 0.025 |
| CO-ORDINATED BY | | | | |
| MACHINING DEVIATIONS FOR NON-TOLERANCED DIMENSIONS | | | | |
| LENGTH IN mm OF SHORTER SIDE OF ANGLES | | | | |
| UPTO 10 | 10-50 | 50-120 | OVER 120-400 | |
| ±1' | ±0'-30' | ±0'-20' | ±0'-10' | |

| LENGTH OR DIA | UPTO 6 | 6-30 | 30-120 | 120-315 |
|---|---|---|---|---|
| | ±0.1 | ±0.2 | ±0.3 | ±0.5 |

| REV | ZONE | DESCRIPTION | DATE | REMARKS | APPROVED BY |
|---|---|---|---|---|---|
| | | | | | |
| | | | | | |
| | | | | | |

REVISION COLUMN

| | | |
|---|---|---|
| NBI GROUP: | | SIZE A3 |
| ALL DIMENSIONS ARE IN 'mm' UNLESS OTHERWISE STATED | | |
| SCALE | - | DATE |
| DRAWN | ARK | |
| DESIGNED | | |
| APPROVED | | |

THIRD ANGLE PROJECTION

INSTITUTE FOR PLASMA RESEARCH
BHAT, GANDHINAGAR-382 428.

TITLE
MAGNET ASSY. DETAILS

REF DRG NO:

REV R0

DRG.NO 2.04.02.030

SHEET 01 OF 03

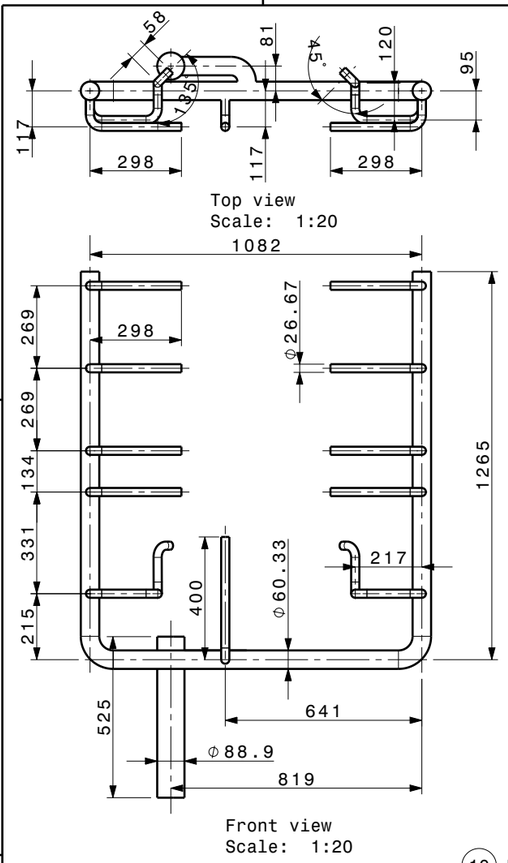


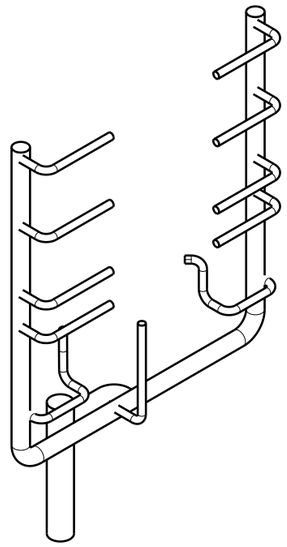


(10).MAGNET LINER INLET

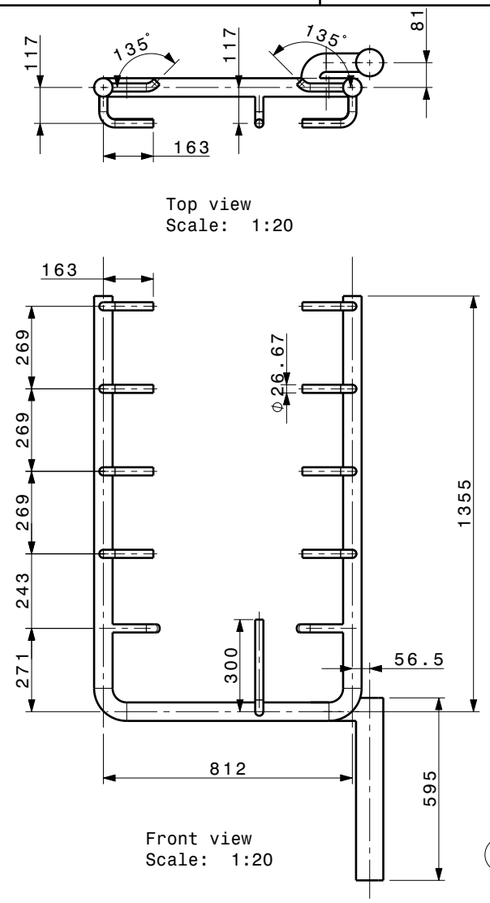


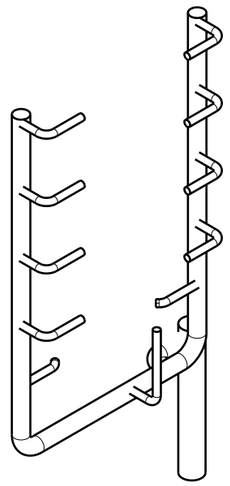


(11).MAGNET LINER OUTLET

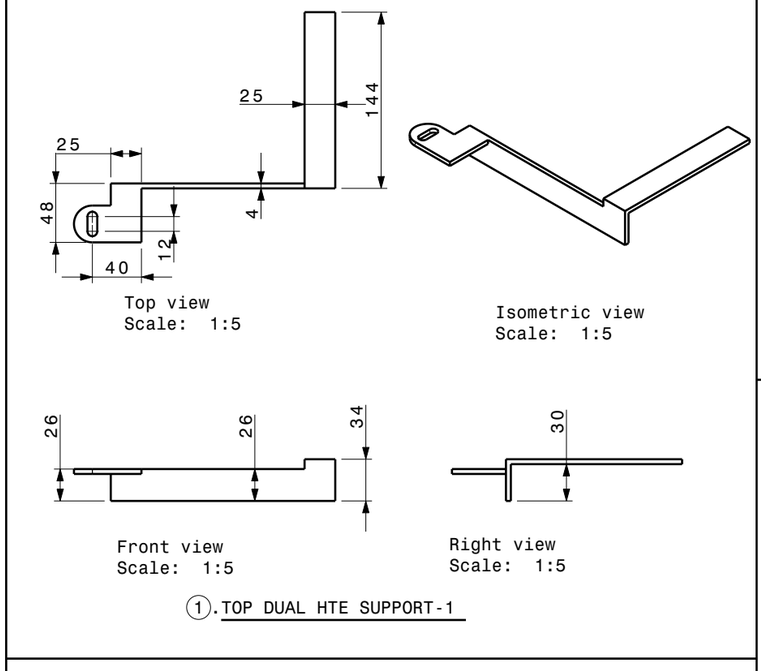


(1).TOP DUAL HTE SUPPORT-1

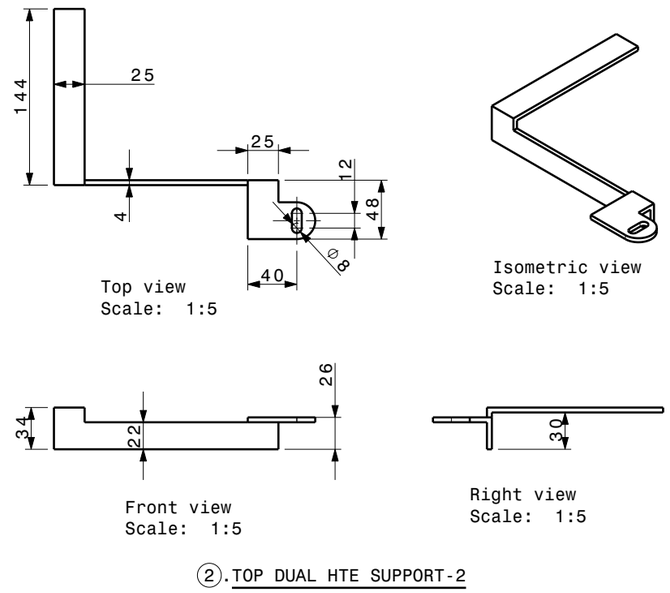


(2).TOP DUAL HTE SUPPORT-2

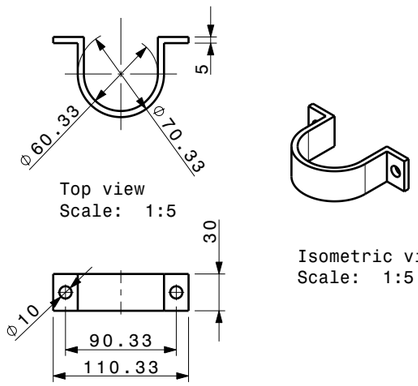


(6).CLAMP-2

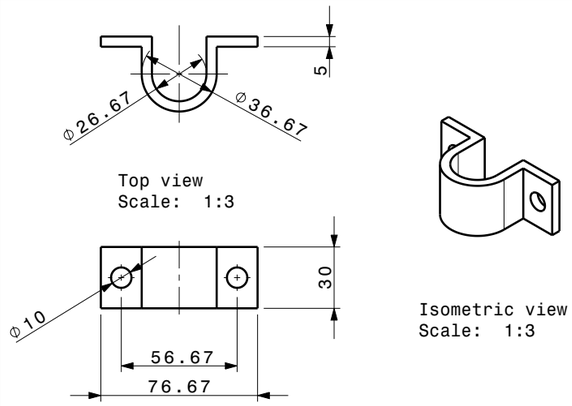


(5).CLAMP-1

| DRG.NO | ▽ 8-25 | ▽▽ 1.6-8 | ▽▽▽ 0.025-1.6 | ▽▽▽▽ < 0.025 |
|---|---|---|---|---|
| CO-ORDINATED BY | | | | |

MACHINING DEVIATIONS FOR NON-TOLERANCED DIMENSIONS

| LENGTH IN mm OF SHORTER SIDE OF ANGLES | | | | LENGTH OR DIA | UPTO 6 | 6-30 | 30-120 | 120-315 |
|---|---|---|---|---|---|---|---|---|
| UPTO 10 | 10-50 | 50-120 | OVER 120-400 | | | | | |
| ±1° | ±0°-30' | ±0°-20' | ±0°-10' | | ±0.1 | ±0.2 | ±0.3 | ±0.5 |

REVISION COLUMN

| REV | ZONE | DESCRIPTION | DATE | REMARKS | APPROVED BY |
|---|---|---|---|---|---|
| | | | | | |

| NBI GROUP: | | SIZE A3 |
|---|---|---|
| ALL DIMENSIONS ARE IN `mm' UNLESS OTHERWISE STATED | | |
| SCALE | NTS | DATE |
| DRAWN | A.R.K. | |
| CHECKED | | |
| APPROVED | | |

THIRD ANGLE PROJECTION

INSTITUTE FOR PLASMA RESEARCH
BHAT, GANDHINAGAR-382 428.

TITLE: MAGNET DETAILS

REF DRG NO:

REV 00

DRG.NO 2.04.02.030

SHEET 02 OF 03

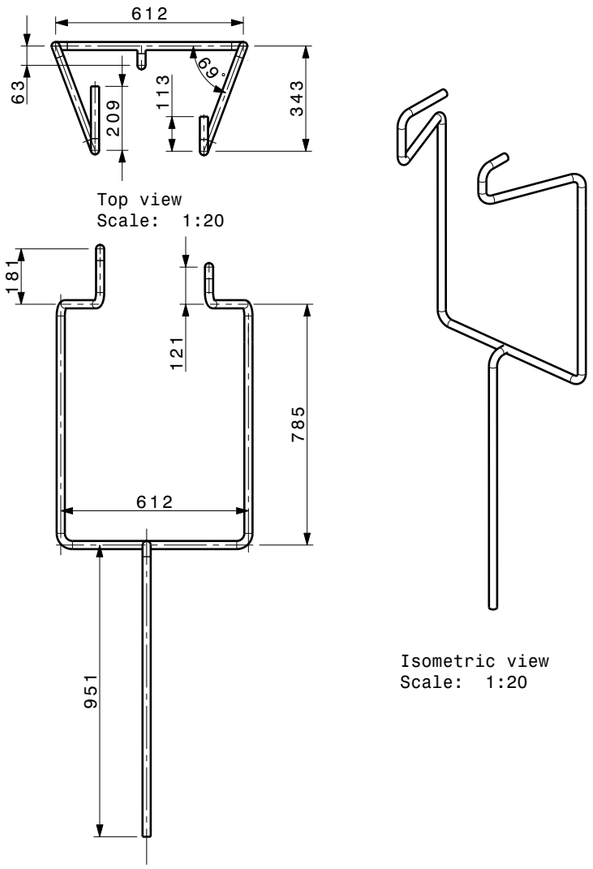


Top view
Scale: 1:20

Isometric view
Scale: 1:20

Front view
Scale: 1:20

⑧.MAGNET COIL INLET

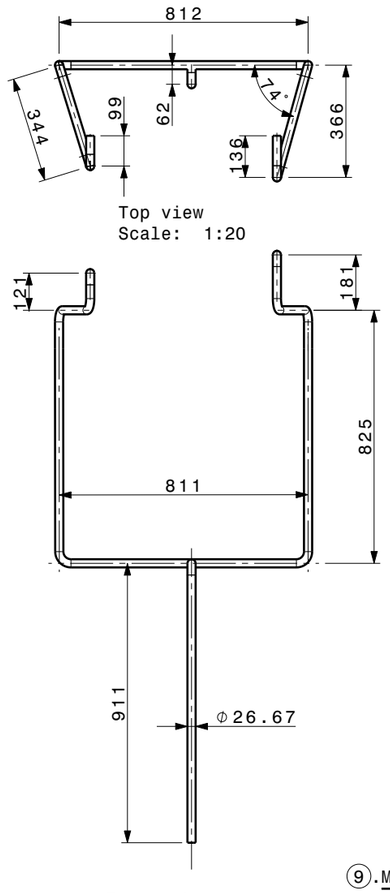


Top view
Scale: 1:20

Isometric view
Scale: 1:20

Front view
Scale: 1:20

⑨.MAGNET COIL OUTLET

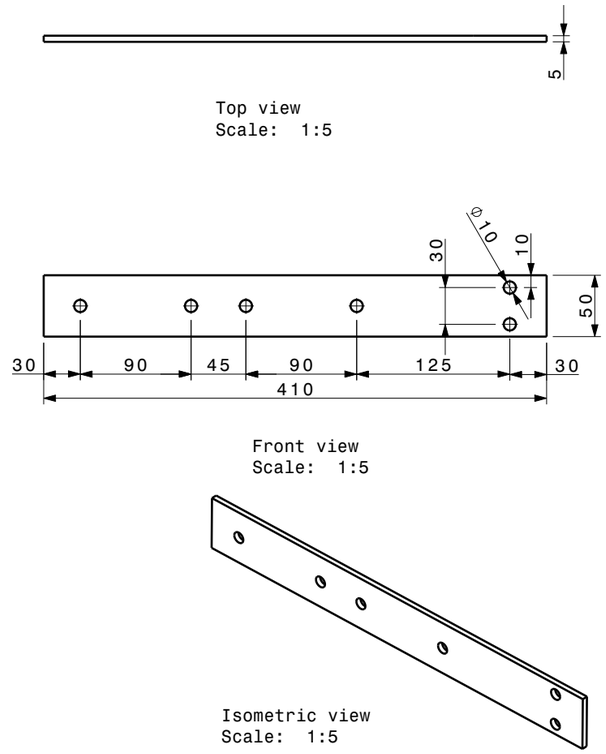


Top view
Scale: 1:5

Front view
Scale: 1:5

Isometric view
Scale: 1:5

④.CLAMP SUPPORT-2

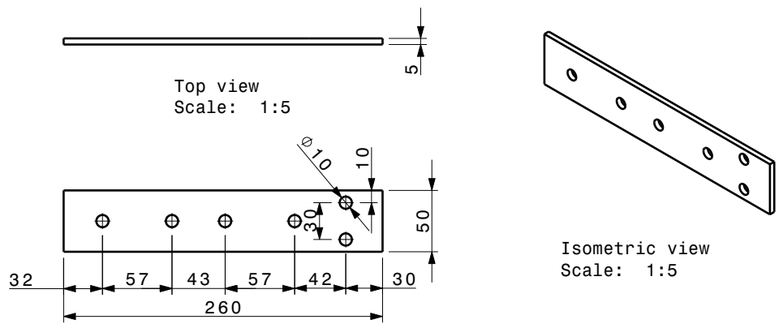


Top view
Scale: 1:5

Isometric view
Scale: 1:5

Front view
Scale: 1:5

③.CLAMP SUPPORT-1

| DRG.NO | ▽ 8-25 | ▽▽ 1.6-8 | ▽▽▽ 0.025-1.6 | ▽▽▽▽ < 0.025 |
|---|---|---|---|---|
| CO-ORDINATED BY | | | | |

MACHINING DEVIATIONS FOR NON-TOLERANCED DIMENSIONS

| LENGTH IN mm OF SHORTER SIDE OF ANGLES | | | | LENGTH OR DIA | UPTO 6 | 6-30 | 30-120 | 120-315 |
|---|---|---|---|---|---|---|---|---|
| UPTO 10 | 10-50 | 50-120 | OVER 120-400 | | | | | |
| ±1° | ±0°-30' | ±0°-20' | ±0°-10' | | ±0.1 | ±0.2 | ±0.3 | ±0.5 |

REVISION COLUMN

| REV | ZONE | DESCRIPTION | DATE | REMARKS | APPROVED BY |
|---|---|---|---|---|---|
| | | | | | |
| | | | | | |
| | | | | | |
| | | | | | |

| NBI GROUP: | SIZE A3 |
|---|---|
| ALL DIMENSIONS ARE IN `mm' UNLESS OTHERWISE STATED | |

INSTITUTE FOR PLASMA RESEARCH
BHAT, GANDHINAGAR-382 428.

| SCALE | NTS | DATE |
|---|---|---|
| DRAWN | A.R.K. | |
| CHECKED | | |
| APPROVED | | |

THIRD ANGLE PROJECTION

TITLE: MAGNET DETAILS

REF DRG NO:

REV 00

DRG.NO 2.04.02.030

SHEET 03 OF 03

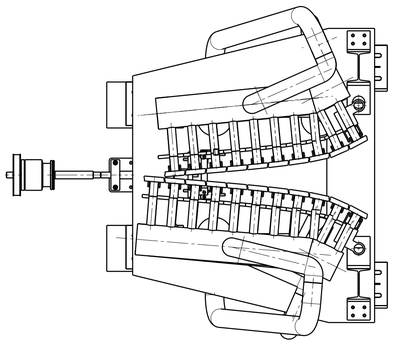

Top view
Scale: 1:10

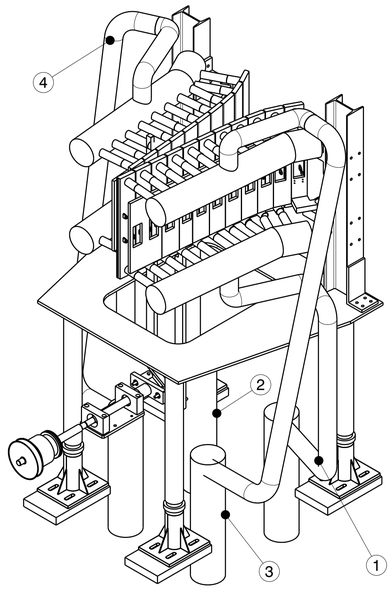


Isometric view
Scale: 1:10

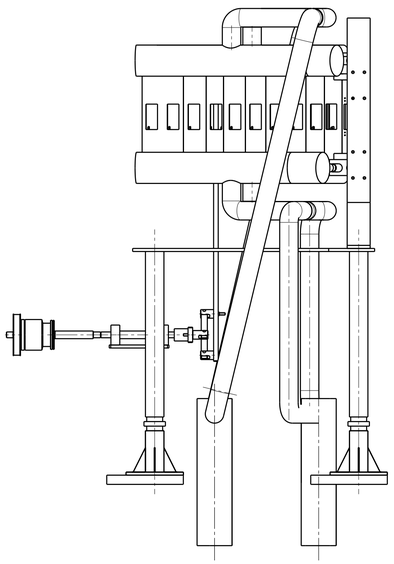

Front view
Scale: 1:10

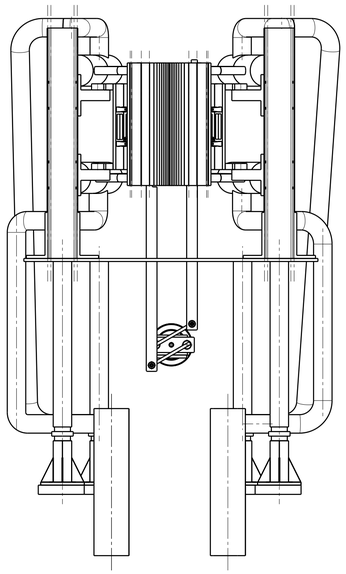

Right view
Scale: 1:10

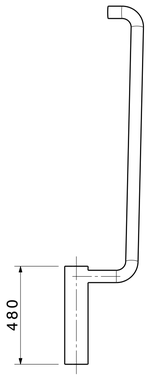


Front view
Scale: 1:15

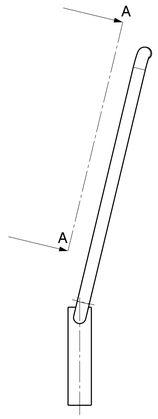


Right view
Scale: 1:15

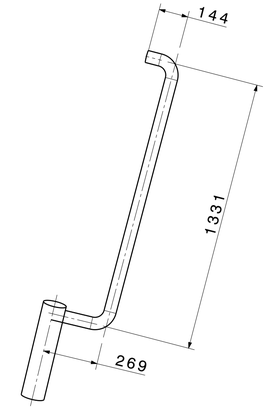


Auxiliary view A
Scale: 1:15

## 3 . OUTLET-1

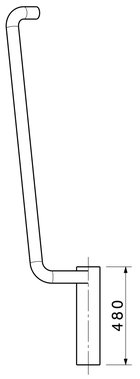


Front view
Scale: 1:15

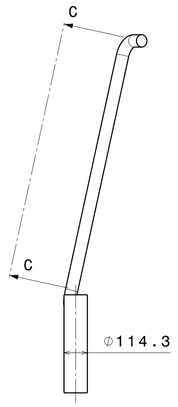


Right view
Scale: 1:15

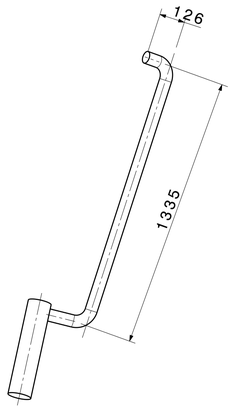


Auxiliary view C
Scale: 1:15

## 4 . OUTLET-2

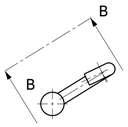


Top view
Scale: 1:15

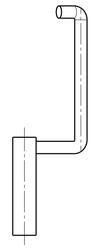

Front view
Scale: 1:15

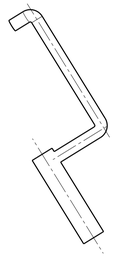

Auxiliary view B
Scale: 1:15

## 1 . INLET-1

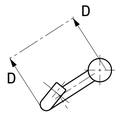


Top view
Scale: 1:15

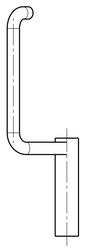

Front view
Scale: 1:15

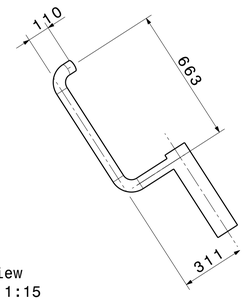


Auxiliary view D
Scale: 1:15

## 2 . INLET-2

| NOTE: | |
|---|---|
| 1 | 3D MODEL SHOWN IN THIS SHEET IS FOR THE SAKE OF UNDERSTANDING ONLY FOR THE VENDORS. |
| 2 | ALL PIPES ARE OF SCH.10S. |
| 3 | REQUIRED PIPES & BENDS ARE FREE ISSUE OF MATERIAL. |

| DRG.NO | ▽ 8-25 | ▽▽ 1.6-8 | ▽▽▽ 0.025-1.6 | ▽▽▽▽ < 0.025 |
|---|---|---|---|---|
| CO-ORDINATED BY | | | | |
| MACHINING DEVIATIONS FOR NON-TOLERANCED DIMENSIONS | | | | |

| LENGTH IN mm OF SHORTER SIDE OF ANGLES | | | | LENGTH OR DIA | UPTO 6 | 6-30 | 30-120 | 120-315 |
|---|---|---|---|---|---|---|---|---|
| UPTO 10 | 10-50 | 50-120 | OVER 120-400 | | | | | |
| ±1° | ±0°-30' | ±0°-20' | ±0°-10' | | ±0.1 | ±0.2 | ±0.3 | ±0.5 |

| REVISION COLUMN | | | | | |
|---|---|---|---|---|---|
| REV | ZONE | DESCRIPTION | DATE | REMARKS | APPROVED BY |
| | | | | | |
| | | | | | |
| | | | | | |

| | | | |
|---|---|---|---|
| NBI GROUP: | | SIZE A3 | INSTITUTE FOR PLASMA RESEARCH BHAT, GANDHINAGAR-382 428. |
| ALL DIMENSIONS ARE IN 'mm' UNLESS OTHERWISE STATED | | | |
| SCALE | - | DATE | TITLE CALORIMETER ASSY & DETAILS |
| DRAWN | ARK | | THIRD ANGLE PROJECTION |
| DESIGNED | | | REF DRG NO: REV R0 |
| APPROVED | | | DRG.NO 2.04.02.031 SHEET 01 OF 01 |

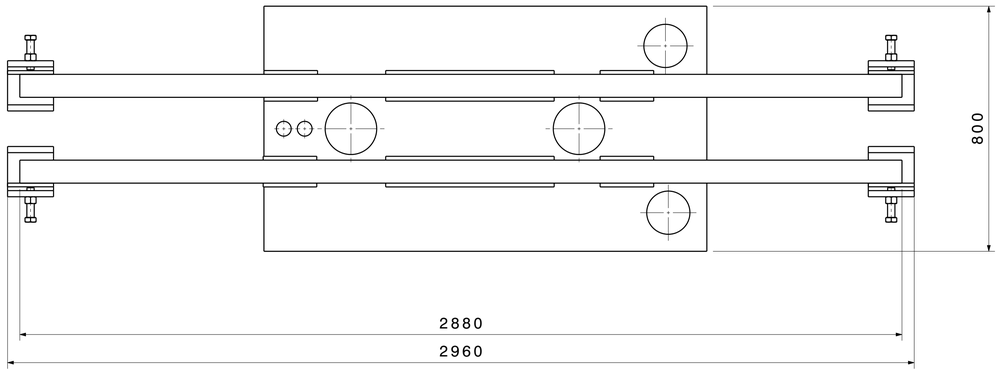


Top view
Scale: 1:10

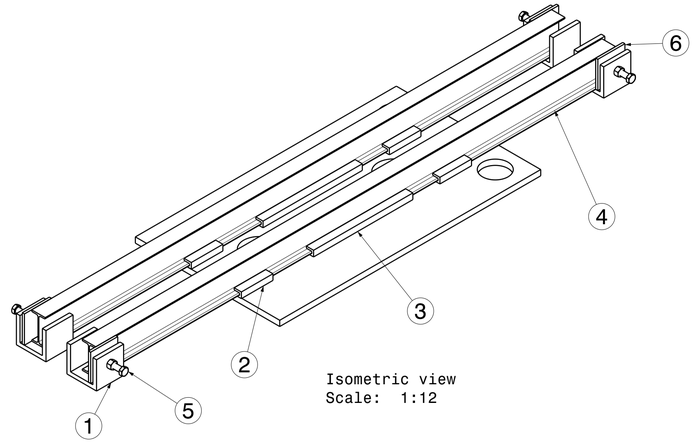


Isometric view
Scale: 1:12

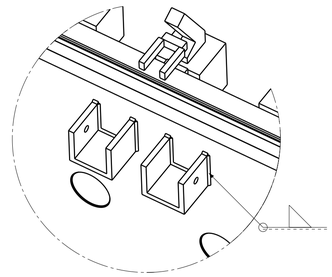

Isometric view
Scale: 1:10

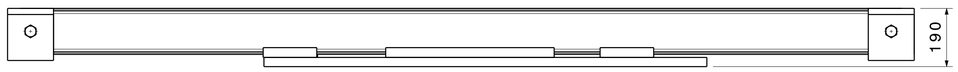


Front view
Scale: 1:10

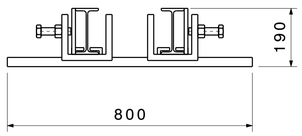


Right view
Scale: 1:10

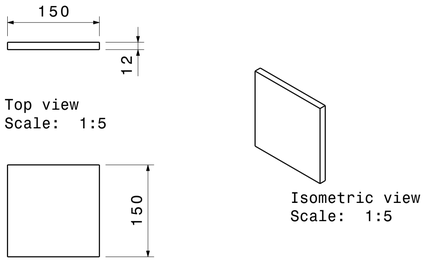


Top view
Scale: 1:5

Isometric view
Scale: 1:5

Front view[6]
Scale: 1:5

## 5. ION DUMP GUIDE PLATE

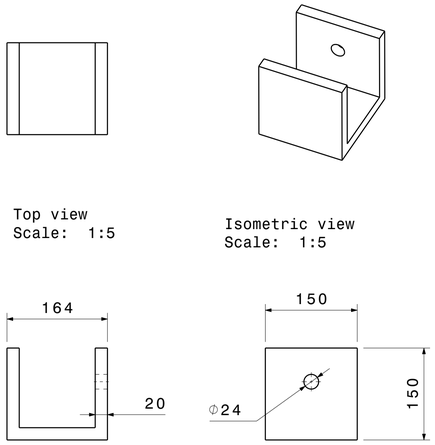


Top view
Scale: 1:5

Isometric view
Scale: 1:5

Front view
Scale: 1:5

Right view
Scale: 1:5

## 1. ION DUMP WALL SUPPORT

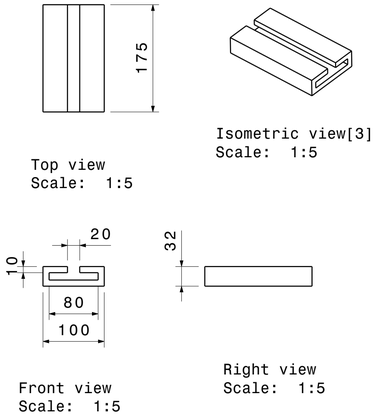


Top view
Scale: 1:5

Isometric view[3]
Scale: 1:5

Front view
Scale: 1:5

Right view
Scale: 1:5

## 2. HOLDING PLATE-1

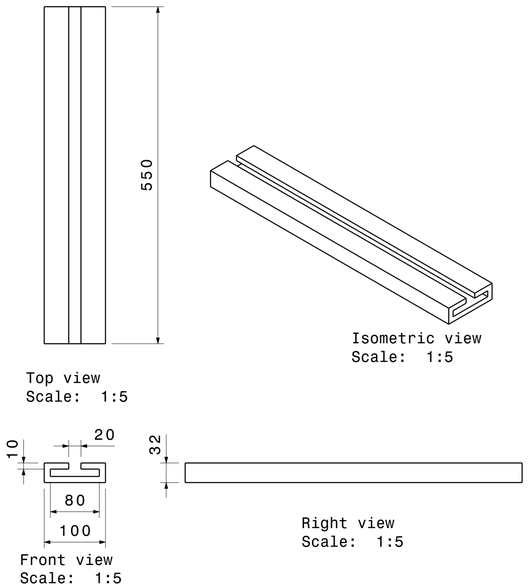


Top view
Scale: 1:5

Isometric view
Scale: 1:5

Front view
Scale: 1:5

Right view
Scale: 1:5

## 3. HOLDING PLATE-2

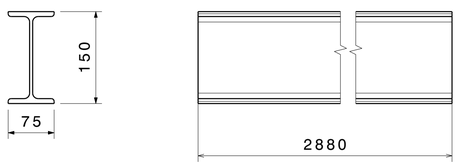


Front view
Scale: 1:5

Right view
Scale: 1:5

## 4. I - BEAM

| NOTE: | |
|---|---|
| 1 | THE SCOPE OF SUPPLY FROM THE VENDOR IS AS LISTED IN THE BOM. |
| 2 | ALL PIPES ARE OF SCH.10S. |
| 3 | REQUIRED PIPES & BENDS ARE FREE ISSUE OF MATERIAL. |

| PART NO. | DESCRIPTION | MATERIAL | QTY. | REMARKS |
|---|---|---|---|---|
| 1 | ION DUMP WALL SUPPORT | SS 304 L | 4 | |
| 2 | HOLDING PLATE-1 | SS 304 L | 4 | |
| 3 | HOLDING PLATE-2 | SS 304 L | 2 | |
| 4 | I - BEAM | SS 304 L | 2 | |
| 5 | BOLT - NUT | SS 304 L | 4 | |
| 6 | ION DUMP GUIDE PLATE | SS 304 L | 4 | |

| DRG.NO | ▽ 8-25 | ▽▽ 1.6-8 | ▽▽▽ 0.025-1.6 | ▽▽▽▽ < 0.025 |
|---|---|---|---|---|
| CO-ORDINATED BY | | | | |

MACHINING DEVIATIONS FOR NON-TOLERANCED DIMENSIONS

| LENGTH IN mm OF SHORTER SIDE OF ANGLES | | | | LENGTH OR DIA | UPTO 6 | 6-30 | 30-120 | 120-315 |
|---|---|---|---|---|---|---|---|---|
| UPTO 10 | 10-50 | 50-120 | OVER 120-400 | | | | | |
| ±1' | ±0°-30' | ±0°-20' | ±0°-10' | | ±0.1 | ±0.2 | ±0.3 | ±0.5 |

| REVISION COLUMN | | | | | |
|---|---|---|---|---|---|
| REV | ZONE | DESCRIPTION | DATE | REMARKS | APPROVED BY |
| | | | | | |
| | | | | | |
| | | | | | |
| | | | | | |

| | | | |
|---|---|---|---|
| NBI GROUP: | SIZE A3 | INSTITUTE FOR PLASMA RESEARCH BHAT, GANDHINAGAR-382 428. | |
| ALL DIMENSIONS ARE IN 'mm' UNLESS OTHERWISE STATED | | | |
| SCALE | - | DATE | TITLE: ION DUMP SUPPORT ASSY. |
| DRAWN | ARK | - | THIRD ANGLE PROJECTION |
| DESIGNED | | | REF DRG NO: |
| APPROVED | | | DRG.NO 2.04.02.032 — REV R0 — SHEET 01 OF 01 |

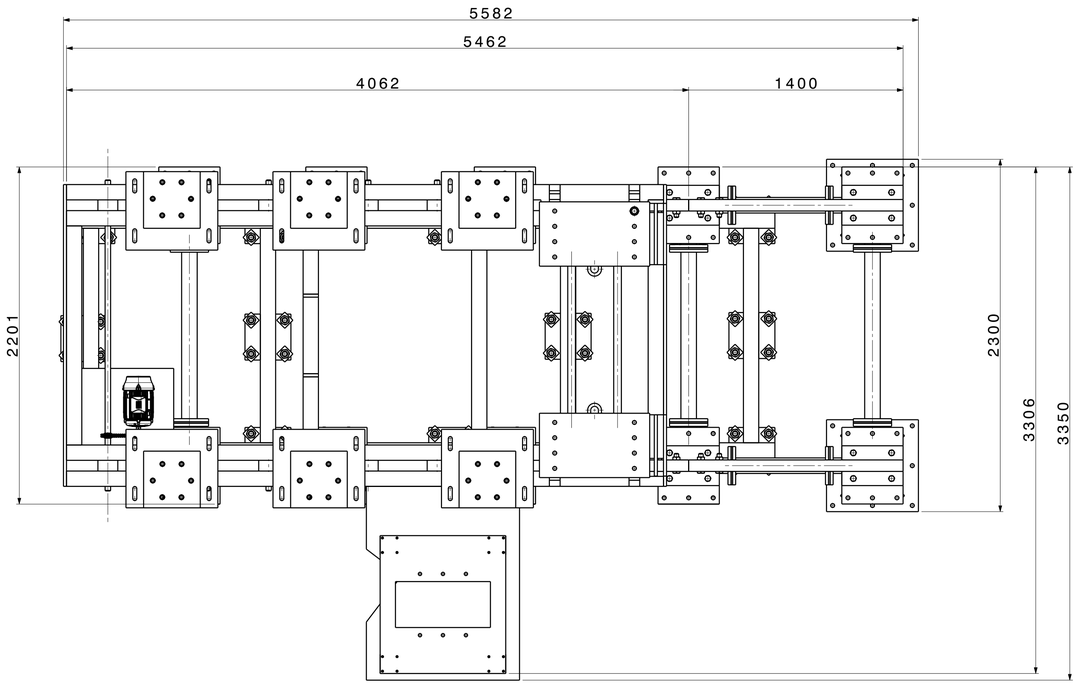


Top view
Scale: 1:20

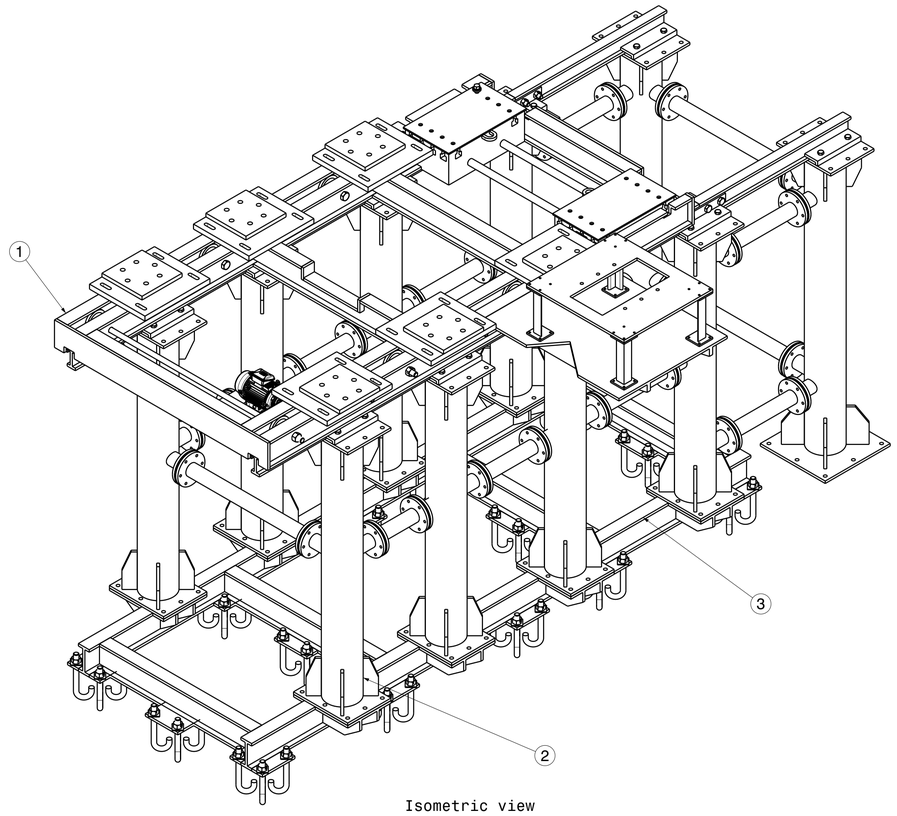


Isometric view
Scale: 1:20

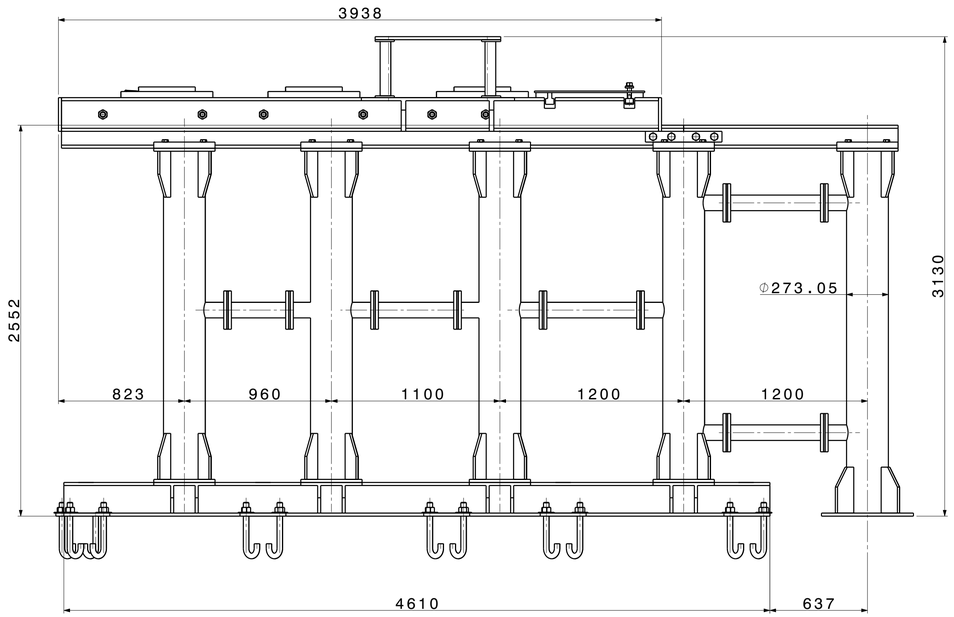


Front view
Scale: 1:20

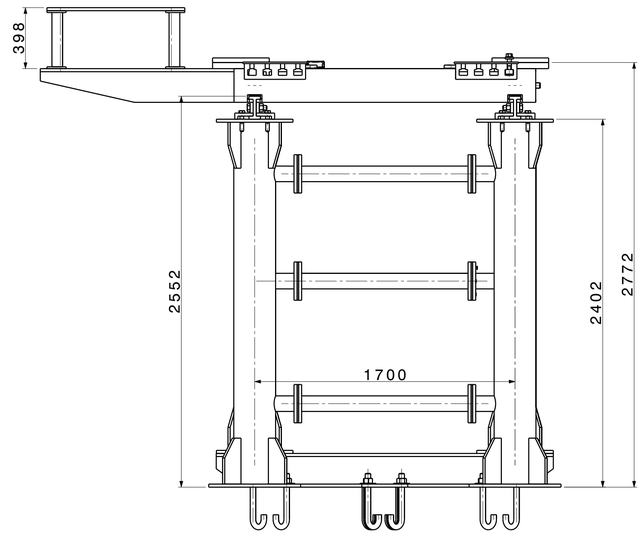


Right view
Scale: 1:20

**P.S:**
**1. THIS SYSTEM IS ENTIRELY UNDER THE VENDOR'S SCOPE OF SUPPLY.**
**2. FOR DETAILS PLEASE REFER TENDER DOCUMENTS.**

| PART NO. | DESCRIPTION | MATERIAL | QTY. | REMARKS |
|---|---|---|---|---|
| 1 | CARRIAGE | SS 304 | 1 | SHEET-2 |
| 2 | MIDDLE STRUCTURE | SS 304 | 1 | SHEET-3 |
| 3 | BOTTOM STRUCTURE | SS 304 | 1 | SHEET-4 |

| DRG.NO | ▽ 8-25 | ▽▽ 1.6-8 | ▽▽▽ 0.025-1.6 | ▽▽▽▽ < 0.025 |
|---|---|---|---|---|
| CO-ORDINATED BY | | | | |

MACHINING DEVIATIONS FOR NON-TOLERANCED DIMENSIONS

| LENGTH IN mm OF SHORTER SIDE OF ANGLES | | | | LENGTH OR DIA | UPTO 6 | 6-30 | 30-120 | 120-315 |
|---|---|---|---|---|---|---|---|---|
| UPTO 10 | 10-50 | 50-120 | OVER 120-400 | | | | | |
| ±1° | ±0°-30' | ±0°-20' | ±0°-10' | | ±0.1 | ±0.2 | ±0.3 | ±0.5 |

| REV | ZONE | DESCRIPTION | DATE | REMARKS | APPROVED BY |
|---|---|---|---|---|---|
| | | | | | |
| | | | | | |
| | | | | | |
| | | | | | |

REVISION COLUMN

| | | |
|---|---|---|
| NBI GROUP: | SIZE A3 | |
| ALL DIMENSIONS ARE IN mm UNLESS OTHERWISE STATED | | |
| SCALE | - | DATE |
| DRAWN | ARK | |
| DESIGNED | SRB | |
| APPROVED | VP | |

THIRD ANGLE PROJECTION

INSTITUTE FOR PLASMA RESEARCH
BHAT, GANDHINAGAR-382 428.

TITLE
NBI SUPPORT STRUCTURE (SSNBI) ASSY.

REF DRG NO: -
REV R0
DRG.NO 2.04.02.033
SHEET 01 OF 04

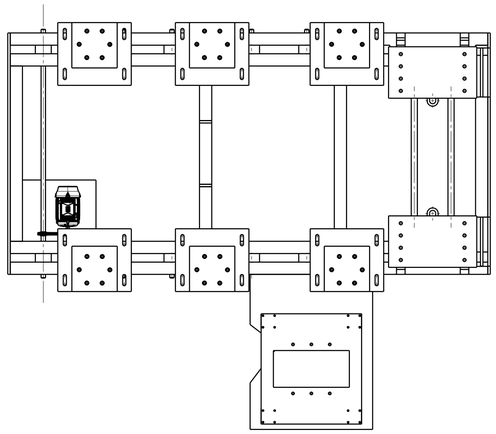

Top view
Scale: 1:25

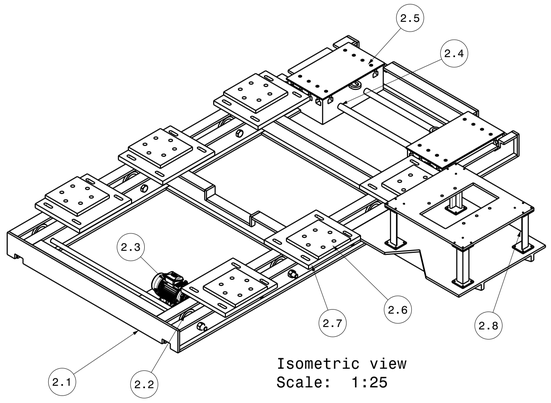


Isometric view
Scale: 1:25

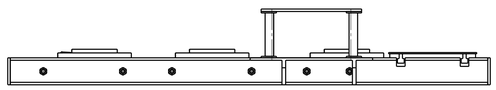

Front view
Scale: 1:25

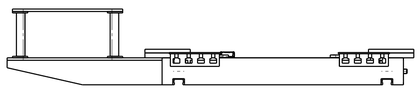

Right view
Scale: 1:25

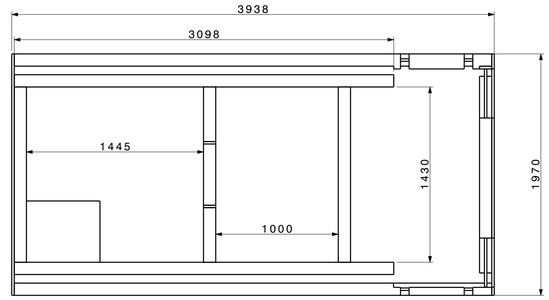


Top view
Scale: 1:25

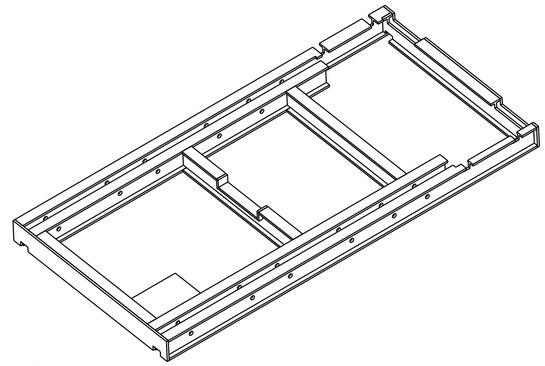

Isometric view
Scale: 1:25

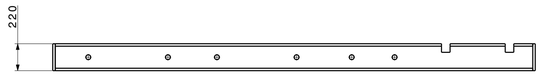


Front view
Scale: 1:25

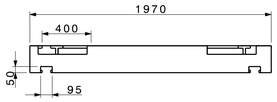


Right view
Scale: 1:25

2.1

Top view
Scale: 1:10

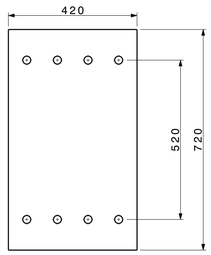


Front view
Scale: 1:10

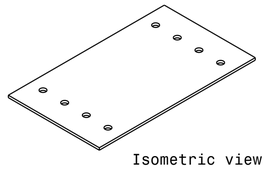

Isometric view
Scale: 1:10

2.5

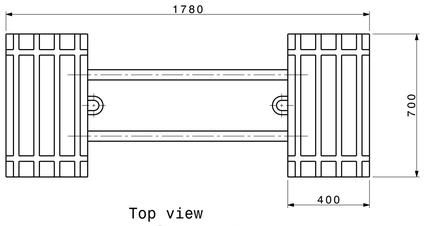


Top view
Scale: 1:15

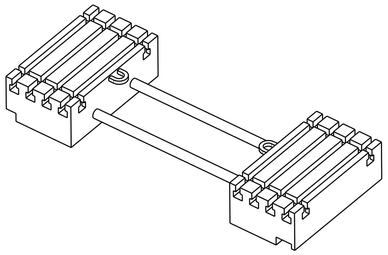

Isometric view
Scale: 1:15

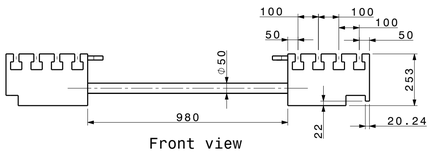


Front view
Scale: 1:15

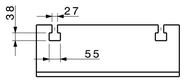


Right view
Scale: 1:15

2.4

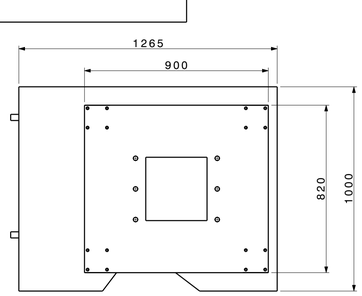


Top view
Scale: 1:15

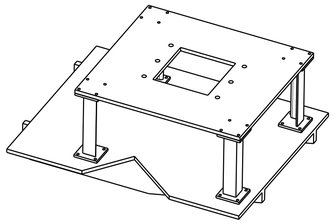

Isometric view
Scale: 1:15

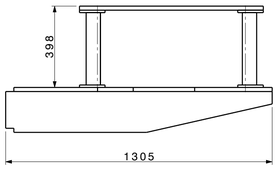


Front view
Scale: 1:15

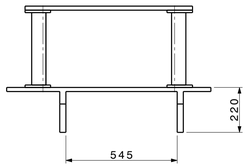


Right view
Scale: 1:15

2.8

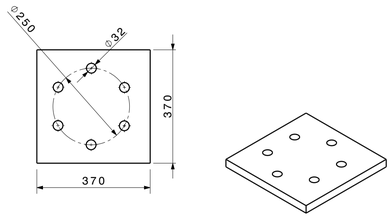


Top view
Scale: 1:10

Isometric view
Scale: 1:10

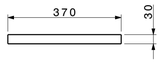


Front view
Scale: 1:10

2.6

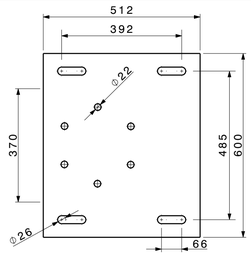


Top view
Scale: 1:10

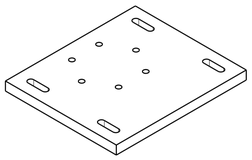

Isometric view[2]
Scale: 1:10

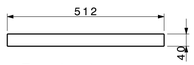


Front view
Scale: 1:10

2.7

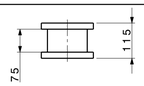


Top view
Scale: 1:10

Isometric view
Scale: 1:10

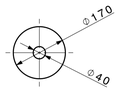


Front view
Scale: 1:10

2.2

| PART NO. | DESCRIPTION (CARRIAGE) | MATERIAL | QTY. | REMARKS |
|---|---|---|---|---|
| 2.1 | FRAME | SS 304 | 1 | |
| 2.2 | WHEELS ASSEMBLY | SS 304 | 12 | |
| 2.3 | MOTOR ASSEMBLY | SS 304 | 1 | |
| 2.4 | GATE VALVE SUPPORT | SS 304 | 1 | |
| 2.5 | ISOLATION PADS FOR GATE VALVE | G10 | 2 | |
| 2.6 | ISOLATION PADS FOR VESSEL SUPPORT | G10 | 6 | |
| 2.7 | VESSEL SUPPORT | SS 304 | 6 | |
| 2.8 | PUMPING STATION SUPPORT | SS 304 | 1 | |

| | | | | | |
|---|---|---|---|---|---|
| DRG.NO | ▽ 8-25 | ▽▽ 1.6-8 | ▽▽▽ 0.025-1.6 | ▽▽▽▽ < 0.025 | |
| CO-ORDINATED BY | | | | | |
| MACHINING DEVIATIONS FOR NON-TOLERANCED DIMENSIONS | | | | | |
| LENGTH IN mm OF SHORTER SIDE OF ANGLES | | | | | |
| UPTO 10 | 10-50 | 50-120 | OVER 120-400 | | |
| ±1' | ±0'-30' | ±0'-20' | ±0'-10' | | |

| LENGTH OR DIA | UPTO 6 | 6-30 | 30-120 | 120-315 |
|---|---|---|---|---|
| | ±0.1 | ±0.2 | ±0.3 | ±0.5 |

REVISION COLUMN

| REV | ZONE | DESCRIPTION | DATE | REMARKS | APPROVED BY |
|---|---|---|---|---|---|
| | | | | | |
| | | | | | |
| | | | | | |
| | | | | | |

| | | | |
|---|---|---|---|
| NBI GROUP: | | SIZE A3 | INSTITUTE FOR PLASMA RESEARCH BHAT, GANDHINAGAR-382 428. |
| ALL DIMENSIONS ARE IN 'mm' UNLESS OTHERWISE STATED | | | |
| SCALE | - | DATE | THIRD ANGLE PROJECTION |
| DRAWN | ARK | | TITLE CARRIAGE DETAILS |
| DESIGNED | SRB | | REF DRG NO: - REV R0 |
| APPROVED | VP | | DRG.NO 2.04.02.033 SHEET 02 OF 04 |

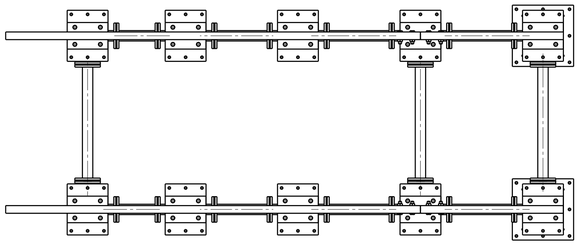

Top view
Scale: 1:30

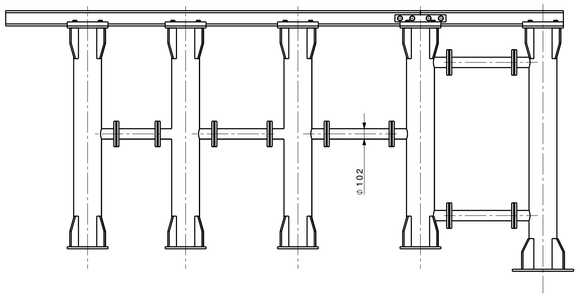


Front view
Scale: 1:30

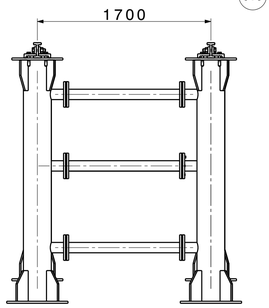


Right view
Scale: 1:30

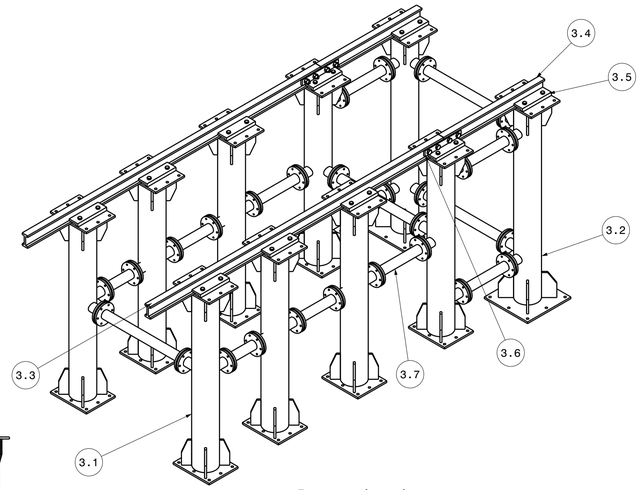


Isometric view
Scale: 1:30

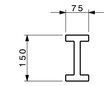


Left view
Scale: 1:10

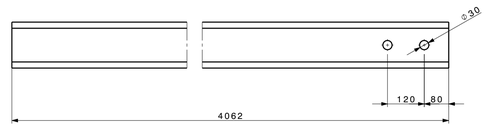


Front view
Scale: 1:10

3.3

Left view
Scale: 1:10

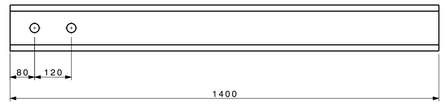


Front view
Scale: 1:10

3.4

Top view
Scale: 1:10

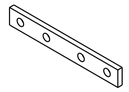

Isometric view
Scale: 1:10

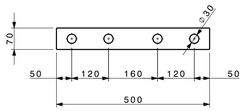


Front view
Scale: 1:10

3.6

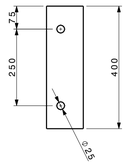


Top view
Scale: 1:10

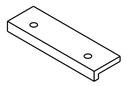

Isometric view
Scale: 1:10

Front view
Scale: 1:10

3.5

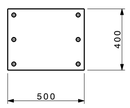


Top view
Scale: 1:20

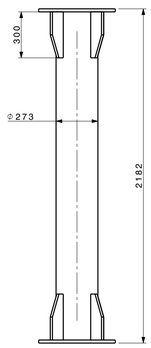


Front view
Scale: 1:20

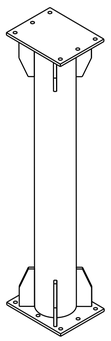

Isometric view
Scale: 1:20

3.1

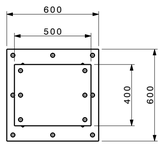


Top view
Scale: 1:20

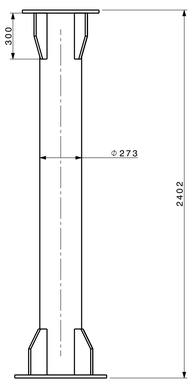


Front view
Scale: 1:20

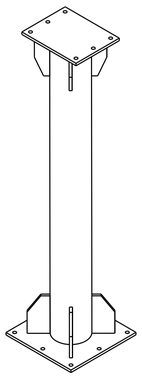

Isometric view
Scale: 1:20

3.2

| PART NO. | DESCRIPTION (MIDDLE STRUCTURE) | MATERIAL | QTY. | REMARKS |
|---|---|---|---|---|
| 3.1 | COLUMN | SS 304 | 8 | |
| 3.2 | TEMPORARY COLUMN | SS 304 | 2 | |
| 3.3 | RAIL | SS 304 | 2 | |
| 3.4 | TEMPORARY RAIL | SS 304 | 2 | |
| 3.5 | CLAMP FOR RAIL SUPPORT | SS 304 | 20 | |
| 3.6 | RAIL CONNECTING PLATE | SS 304 | 4 | |
| 3.7 | CONNECTING PIPE | SS 304 | 12 | |
| 3.8 | BOLT NUT FOR ASSEMBLY | SS 304 | AS PER REQ. | |

| DRG.NO | ▽ 8-25 | ▽▽ 1.6-8 | ▽▽▽ 0.025-1.6 | ▽▽▽▽ < 0.025 |
|---|---|---|---|---|
| CO-ORDINATED BY | | | | |

MACHINING DEVIATIONS FOR NON-TOLERANCED DIMENSIONS

| LENGTH IN mm OF SHORTER SIDE OF ANGLES | | | | LENGTH OR DIA | UPTO 6 | 6-30 | 30-120 | 120-315 |
|---|---|---|---|---|---|---|---|---|
| UPTO 10 | 10-50 | 50-120 | OVER 120-400 | | | | | |
| ±1° | ±0°-30' | ±0°-20' | ±0°-10' | | ±0.1 | ±0.2 | ±0.3 | ±0.5 |

| REVISION COLUMN | | | | | |
|---|---|---|---|---|---|
| REV | ZONE | DESCRIPTION | DATE | REMARKS | APPROVED BY |
| | | | | | |
| | | | | | |
| | | | | | |

| | | | |
|---|---|---|---|
| NBI GROUP: | | SIZE A3 | INSTITUTE FOR PLASMA RESEARCH BHAT, GANDHINAGAR-382 428. |
| ALL DIMENSIONS ARE IN 'mm' UNLESS OTHERWISE STATED | | | |
| SCALE | - | DATE | TITLE MIDDLE STRUCTURE DETAILS |
| DRAWN | ARK | | THIRD ANGLE PROJECTION |
| DESIGNED | SRB | | REF DRG NO: - REV R0 |
| APPROVED | VP | | DRG.NO 2.04.02.033 SHEET 03 OF 04 |

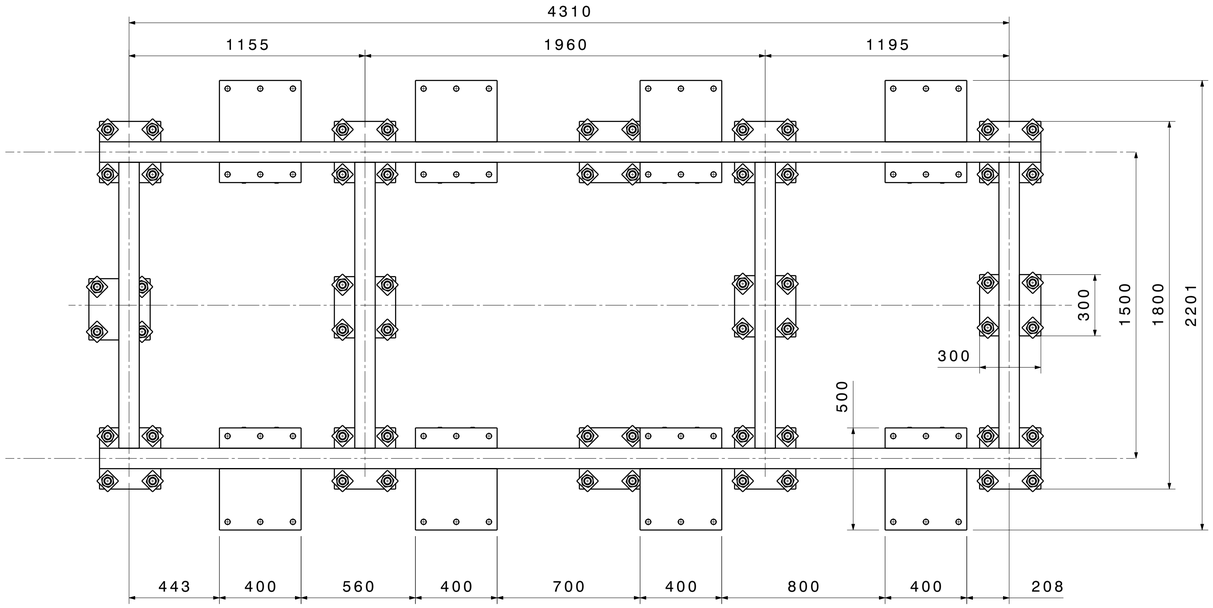


Top view
Scale: 1:15

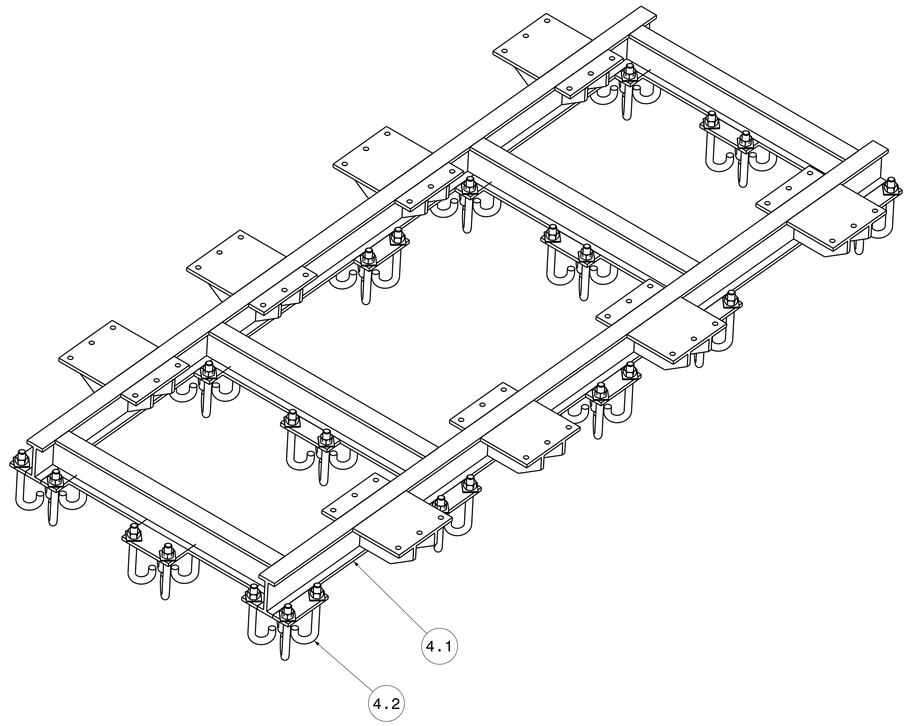


Isometric view
Scale: 1:15

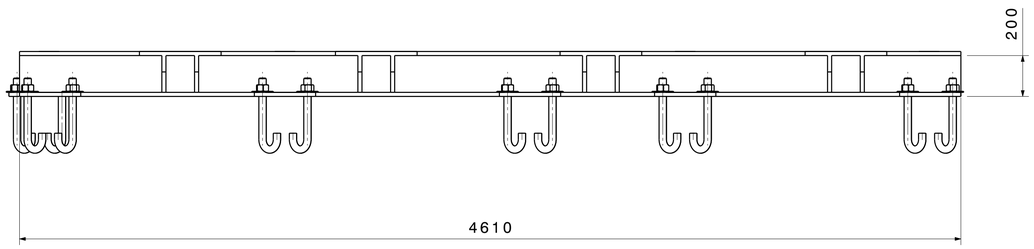


Front view
Scale: 1:15

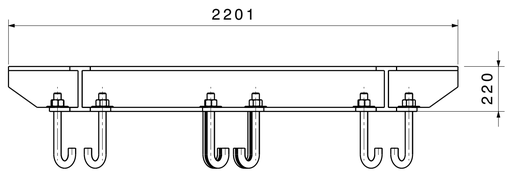


Right view
Scale: 1:15

| PART NO. | DESCRIPTION (BOTTOM STRUCTURE) | MATERIAL | QTY. | REMARKS |
|---|---|---|---|---|
| 4.1 | CHANNEL FRAME | SS 304 | 8 | |
| 4.2 | FOUNDATION BOLT WITH NUT | IS 2062 GR. A/B OR BN GR. BETTER STRENGTH MATERIAL | 64 SETS | M35 |

| DRG.NO | ▽ 8-25 | ▽▽ 1.6-8 | ▽▽▽ 0.025-1.6 | ▽▽▽▽ < 0.025 |
|---|---|---|---|---|
| CO-ORDINATED BY | | | | |

MACHINING DEVIATIONS FOR NON-TOLERANCED DIMENSIONS

| LENGTH IN mm OF SHORTER SIDE OF ANGLES | | | | LENGTH OR DIA | UPTO 6 | 6-30 | 30-120 | 120-315 |
|---|---|---|---|---|---|---|---|---|
| UPTO 10 | 10-50 | 50-120 | OVER 120-400 | | | | | |
| ±1' | ±0°-30' | ±0°-20' | ±0°-10' | | ±0.1 | ±0.2 | ±0.3 | ±0.5 |

| REV | ZONE | DESCRIPTION | DATE | REMARKS | APPROVED BY |
|---|---|---|---|---|---|
| | | | | | |
| | | | | | |
| | | | | | |

REVISION COLUMN

| | | | |
|---|---|---|---|
| NBI GROUP: | | SIZE A3 | INSTITUTE FOR PLASMA RESEARCH BHAT, GANDHINAGAR-382 428. |
| ALL DIMENSIONS ARE IN mm UNLESS OTHERWISE STATED | | | |
| SCALE | - | DATE | TITLE BOTTOM STRUCTURE DETAILS |
| DRAWN | ARK | - | THIRD ANGLE PROJECTION |
| DESIGNED | SRB | | REF DRG NO: - REV R0 |
| APPROVED | VP | | DRG.NO 2.04.02.033 SHEET 04 OF 04 |

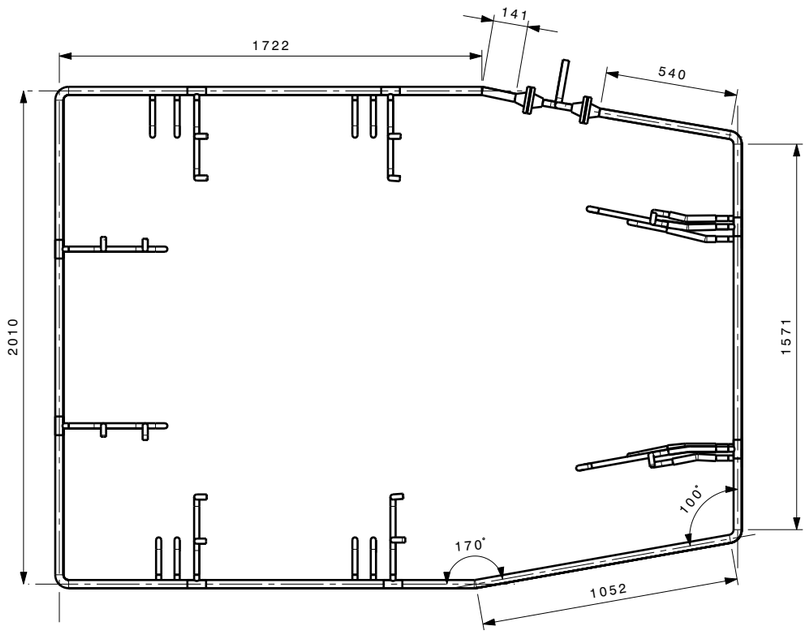


Top view

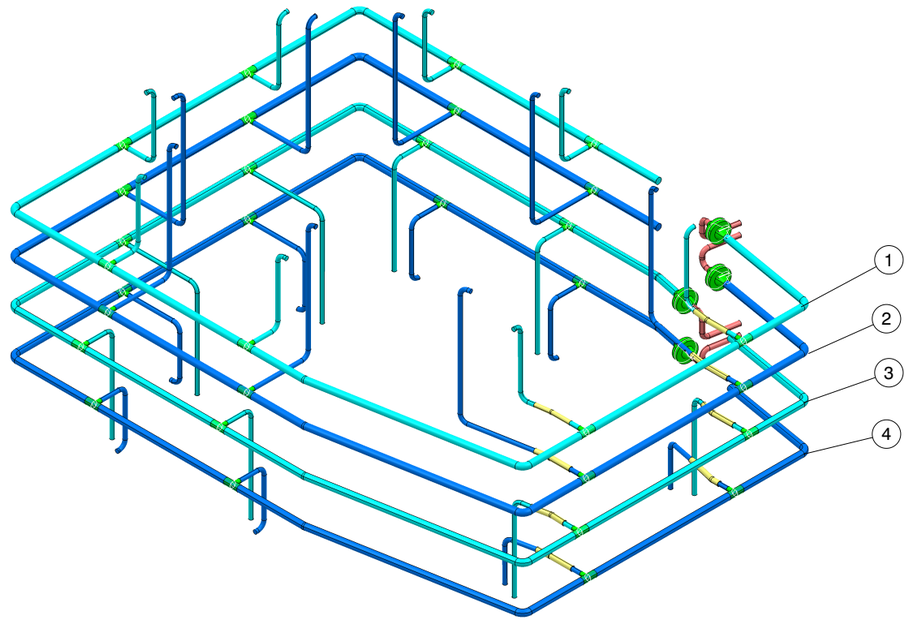


Isometric view

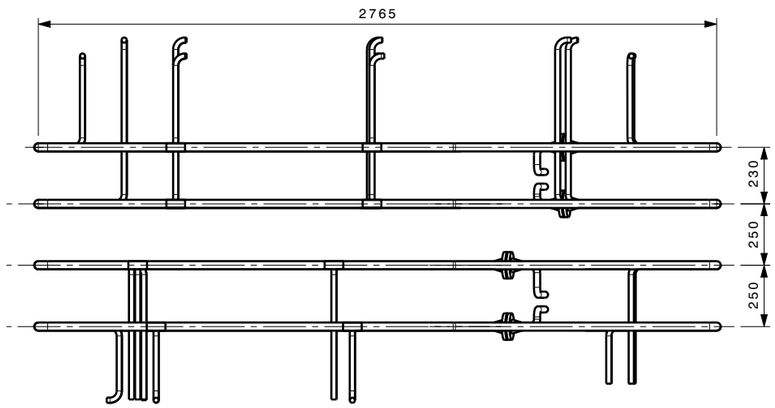


Front view

| PART NO. | DESCRIPTION |
|---|---|
| 4 | $LN_2$ SUPPLY HEADER |
| 3 | LHE SUPPLY HEADER |
| 2 | $GN_2$ RETURN HEADER |
| 1 | GHE RETURN HEADER |

| Sr. No. | NOTE |
|---|---|
| 2 | RAW MATERIAL PIPES, BENDS, TEE, BRAIDED HOSES WILL BE SUPPLIED BY IPR |
| 1 | THIS SYSTEM IS ENTIRELY UNDER THE VENDOR'S SCOPE OF FABRICATION |

| DRG.NO | ▽ 8-25 | ▽▽ 1.6-8 | ▽▽▽ 0.025-1.6 | ▽▽▽▽ < 0.025 |
|---|---|---|---|---|
| CO-ORDINATED BY | | | | |

MACHINING DEVIATIONS FOR NON-TOLERANCED DIMENSIONS

| LENGTH IN mm OF SHORTER SIDE OF ANGLES | | | | LENGTH OR DIA | UPTO 6 | 6-30 | 30-120 | 120-315 |
|---|---|---|---|---|---|---|---|---|
| UPTO 10 | 10-50 | 50-120 | OVER 120-400 | | | | | |
| ±1° | ±0°-30' | ±0°-20' | ±0°-10' | | ±0.1 | ±0.2 | ±0.3 | ±0.5 |

REVISION COLUMN

| REV | ZONE | DESCRIPTION | DATE | REMARKS | APPROVED BY |
|---|---|---|---|---|---|
| | | | | | |
| | | | | | |
| | | | | | |

| NBI GROUP: | SIZE A3 |
|---|---|
| ALL DIMENSIONS ARE IN `mm' UNLESS OTHERWISE STATED | |

| SCALE | NTS | DATE |
|---|---|---|
| DRAWN | A.R.K. | |
| CHECKED | | |
| APPROVED | | |

INSTITUTE FOR PLASMA RESEARCH
BHAT, GANDHINAGAR-382 428.

THIRD ANGLE PROJECTION

TITLE
CRYOGENIC HEADERS IN VACCUM VESSEL

REF DRG NO:

REV 00

DRG.NO 2.04.02.034

SHEET 1 OF 6

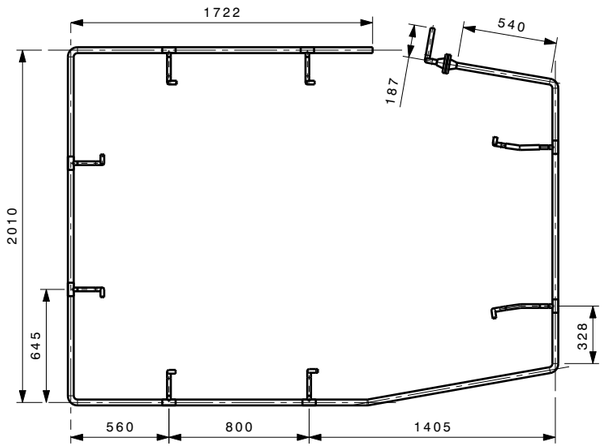


Top view

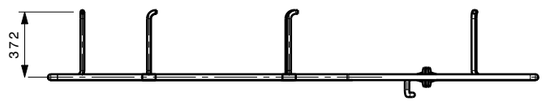


Front view

## 1: HELIUM RETURN HEADER

NB 1" SCH. 10S (MATERIAL: SS304L)

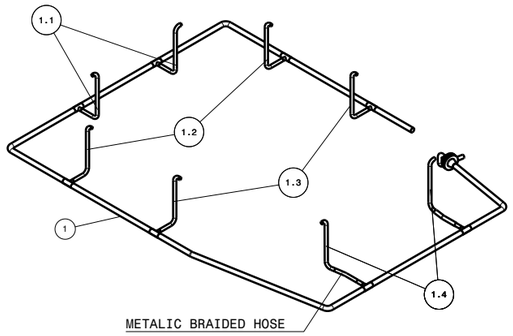


Isometric view

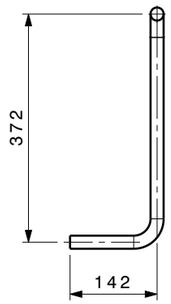


Front view

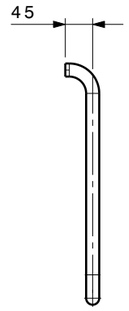


Right view

Isometric view

## 1.1 : HELIUM RETURN BRANCH-1

NB ½" SCH. 10S (MATERIAL: SS304L)

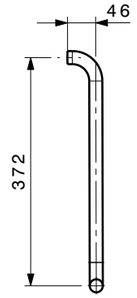


Front view

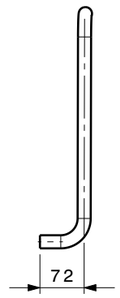


Right view

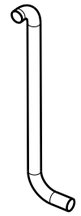

Isometric view

## 1.4 : HELIUM RETURN BRANCH-4

NB ½" SCH. 10S (MATERIAL: SS304L)

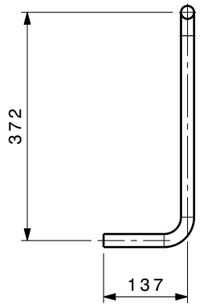


Front view

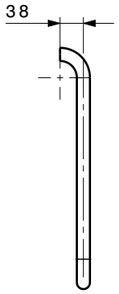


Right view

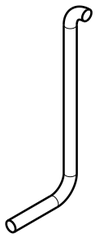

Isometric view

## 1.2 : HELIUM RETURN BRANCH-2

NB ½" SCH. 10S (MATERIAL: SS304L)

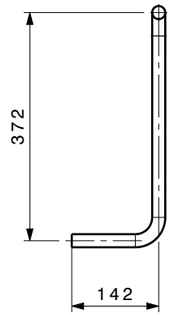


Front view

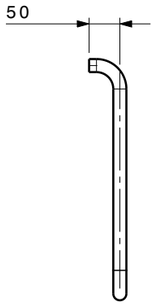


Right view

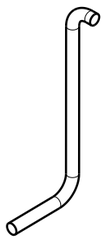

Isometric view

## 1.3 : HELIUM RETURN BRANCH-3

NB ½" SCH. 10S (MATERIAL: SS304L)

NOTE*
1. ALL DIMENSIONS ARE IN MM.
2. METALIC BRAIDED HOSES MAY BE USED AS PER REQUIREMENT IN THE BRANCH LINE.

| | | | | |
|---|---|---|---|---|
| DRG.NO | ▽ 8-25 | ▽▽ 1.6-8 | ▽▽▽ 0.025-1.6 | ▽▽▽▽ < 0.025 |
| CO-ORDINATED BY | | | | |

MACHINING DEVIATIONS FOR NON-TOLERANCED DIMENSIONS

| LENGTH IN mm OF SHORTER SIDE OF ANGLES | | | | LENGTH OR DIA | UPTO 6 | 6-30 | 30-120 | 120-315 |
|---|---|---|---|---|---|---|---|---|
| UPTO 10 | 10-50 | 50-120 | OVER 120-400 | | | | | |
| ±1° | ±0°-30' | ±0°-20' | ±0°-10' | | ±0.1 | ±0.2 | ±0.3 | ±0.5 |

REVISION COLUMN

| REV | ZONE | DESCRIPTION | DATE | REMARKS | APPROVED BY |
|---|---|---|---|---|---|
| | | | | | |
| | | | | | |
| | | | | | |

| | | |
|---|---|---|
| NBI GROUP: | SIZE A3 | |
| ALL DIMENSIONS ARE IN `mm' UNLESS OTHERWISE STATED | | |
| SCALE | NTS | DATE |
| DRAWN | A.R.K. | |
| CHECKED | | |
| APPROVED | | |

INSTITUTE FOR PLASMA RESEARCH
BHAT, GANDHINAGAR-382 428.

THIRD ANGLE PROJECTION

TITLE
HELIUM RETURN HEADER DETAILS

REF DRG NO:

REV 00

DRG.NO 2.04.02.034

SHEET 2 OF 6

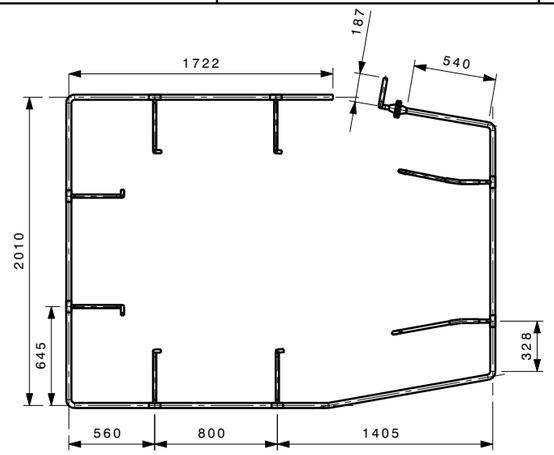


Top view

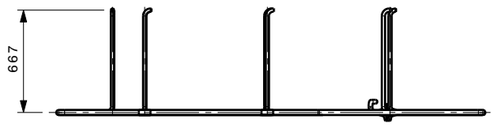


Front view

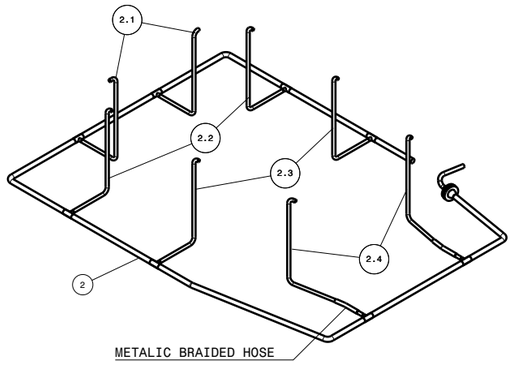


Isometric view
Scale: 1:40

## 2: NITROGEN RETURN HEADER

NB 1" SCH. 10S (MATERIAL: SS304L)

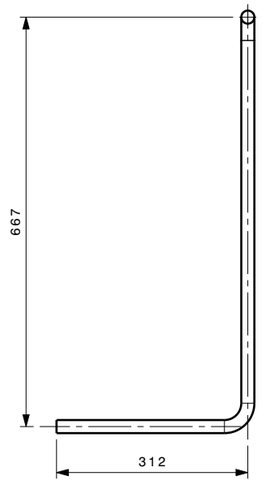


Front view
Scale: 1:10

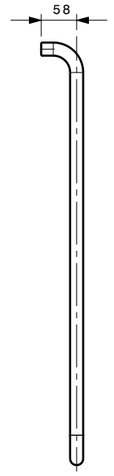


Right view
Scale: 1:10

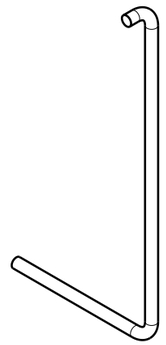

Isometric view
Scale: 1:10

## 2.1 : NITROGEN RETURN BRANCH-1

NB ½" SCH. 10S (MATERIAL: SS304L)

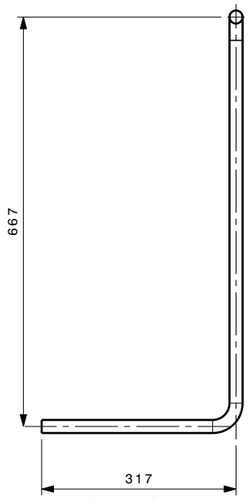


Front view
Scale: 1:10

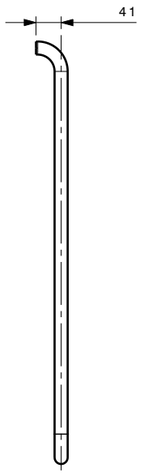


Right view
Scale: 1:10

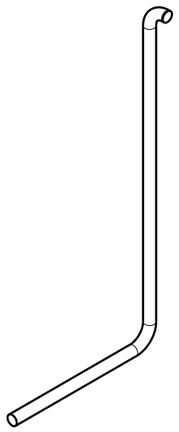

Isometric view
Scale: 1:10

## 2.2 & 2.3 : NITROGEN RETURN BRANCH-2 & 3

NB ½" SCH. 10S (MATERIAL: SS304L)

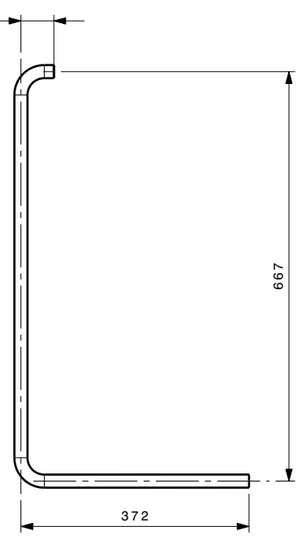


Front view
Scale: 1:10

Isometric view
Scale: 1:10

## 2.4 : NITROGEN RETURN BRANCH-4

NB ½" SCH. 10S (MATERIAL: SS304L)

NOTE*
1. ALL DIMENSIONS ARE IN MM.
2. METALIC BRAIDED HOSES MAY BE USED AS PER REQUIREMENT IN THE BRANCH LINE.

| DRG.NO | ▽ 8-25 | ▽▽ 1.6-8 | ▽▽▽ 0.025-1.6 | ▽▽▽▽ < 0.025 |
|---|---|---|---|---|
| CO-ORDINATED BY | | | | |

MACHINING DEVIATIONS FOR NON-TOLERANCED DIMENSIONS

| LENGTH IN mm OF SHORTER SIDE OF ANGLES | | | | LENGTH OR DIA | UPTO 6 | 6-30 | 30-120 | 120-315 |
|---|---|---|---|---|---|---|---|---|
| UPTO 10 | 10-50 | 50-120 | OVER 120-400 | | | | | |
| ±1° | ±0°-30' | ±0°-20' | ±0°-10' | | ±0.1 | ±0.2 | ±0.3 | ±0.5 |

REVISION COLUMN

| REV | ZONE | DESCRIPTION | DATE | REMARKS | APPROVED BY |
|---|---|---|---|---|---|
| | | | | | |
| | | | | | |
| | | | | | |

| NBI GROUP: | SIZE A3 |
|---|---|
| ALL DIMENSIONS ARE IN `mm' UNLESS OTHERWISE STATED | |

| SCALE | NTS | DATE |
|---|---|---|
| DRAWN | A.R.K. | |
| CHECKED | | |
| APPROVED | | |

THIRD ANGLE PROJECTION

INSTITUTE FOR PLASMA RESEARCH
BHAT, GANDHINAGAR-382 428.

TITLE
NITROGEN RETURN HEADER DETAIL

REF DRG NO:

REV 00

DRG.NO 2.04.02.034

SHEET 3 OF 6

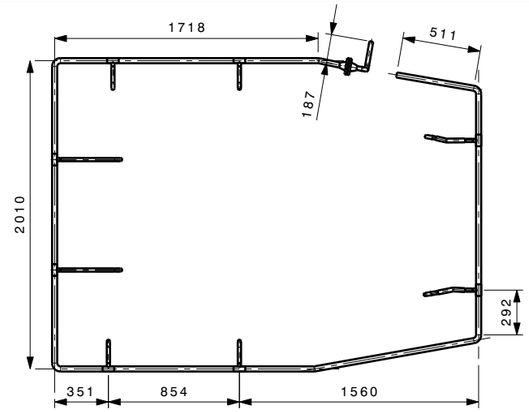


Top view
Scale: 1:40

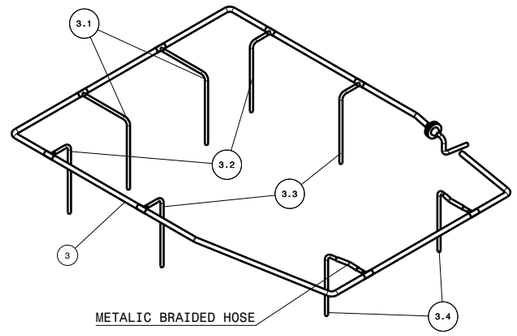


Isometric view
Scale: 1:40

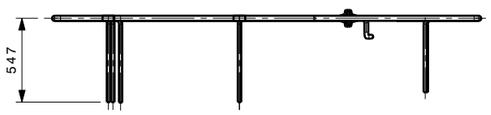


Front view
Scale: 1:40

## 3: HELIUM SUPPLY HEADER

NB 1" SCH. 10S (MATERIAL: SS304L)

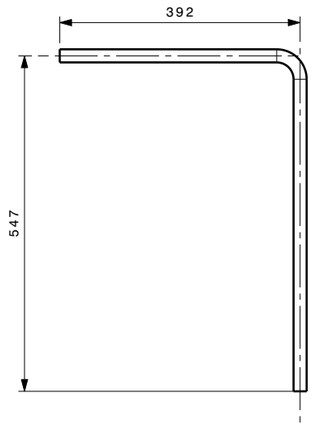


Front view
Scale: 1:10

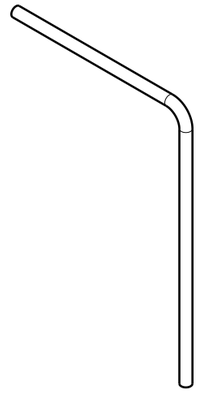

Isometric view
Scale: 1:10

## 3.1 : HELIUM SUPPLY BRANCH-1

NB ½" SCH. 10S (MATERIAL: SS304L)

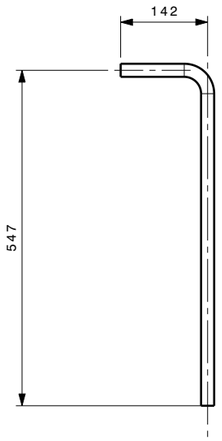


Front view
Scale: 1:10

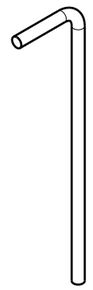

Isometric view
Scale: 1:10

## 3.2 & 3.3 : HELIUM SUPPLY BRANCH-2 & 3

NB ½" SCH. 10S (MATERIAL: SS304L)

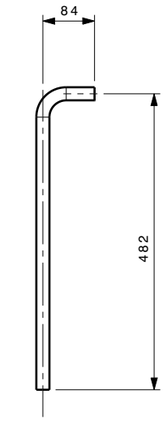


Front view
Scale: 1:10

Isometric view
Scale: 1:10

## 3.4 : HELIUM SUPPLY BRANCH-4

NB ½" SCH. 10S (MATERIAL: SS304L)

NOTE*
1. ALL DIMENSIONS ARE IN MM.
2. METALIC BRAIDED HOSES MAY BE USED AS PER REQUIREMENT IN THE BRANCH LINE.

| DRG.NO | ▽ 8-25 | ▽▽ 1.6-8 | ▽▽▽ 0.025-1.6 | ▽▽▽▽ < 0.025 |
|---|---|---|---|---|
| CO-ORDINATED BY | | | | |

MACHINING DEVIATIONS FOR NON-TOLERANCED DIMENSIONS

| LENGTH IN mm OF SHORTER SIDE OF ANGLES | | | | LENGTH OR DIA | UPTO 6 | 6-30 | 30-120 | 120-315 |
|---|---|---|---|---|---|---|---|---|
| UPTO 10 | 10-50 | 50-120 | OVER 120-400 | | | | | |
| ±1° | ±0°-30' | ±0°-20' | ±0°-10' | | ±0.1 | ±0.2 | ±0.3 | ±0.5 |

REVISION COLUMN

| REV | ZONE | DESCRIPTION | DATE | REMARKS | APPROVED BY |
|---|---|---|---|---|---|
| | | | | | |
| | | | | | |
| | | | | | |

| NBI GROUP: | SIZE A3 |
|---|---|
| ALL DIMENSIONS ARE IN `mm' UNLESS OTHERWISE STATED | |

| | | |
|---|---|---|
| SCALE | NTS | DATE |
| DRAWN | A.R.K. | |
| CHECKED | | |
| APPROVED | | |

INSTITUTE FOR PLASMA RESEARCH
BHAT, GANDHINAGAR-382 428.

THIRD ANGLE PROJECTION

TITLE
HELIUM SUPPLY HEADER DETAIL

REF DRG NO:

REV 00

DRG.NO 2.04.02.034

SHEET 4 OF 6

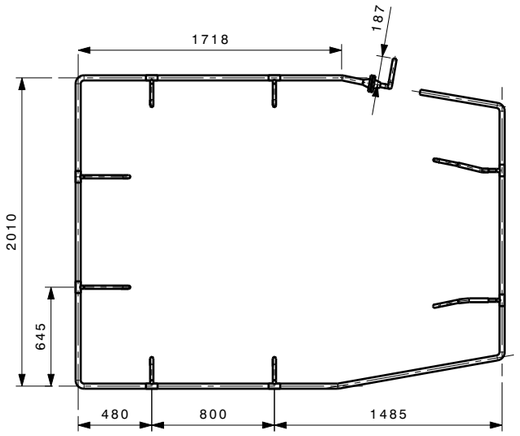


Top view
Scale: 1:40

Front view
Scale: 1:40

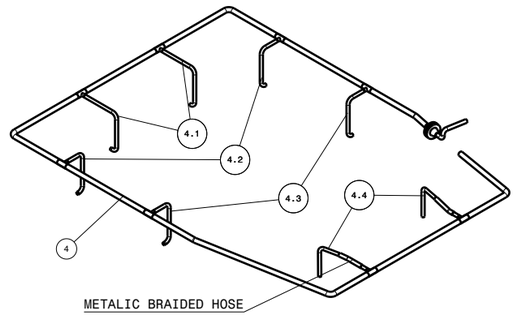


Isometric view
Scale: 1:40

## 4: NITROGEN SUPPLY HEADER

NB 1" SCH. 10S (MATERIAL: SS304L)

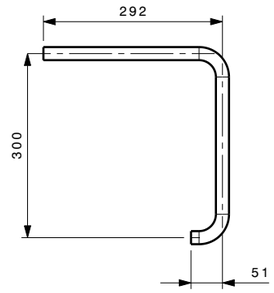


Front view
Scale: 1:10

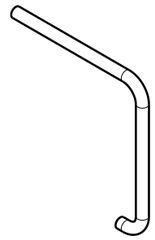

Isometric view
Scale: 1:10

## 4.1 : NITROGEN SUPPLY BRANCH-1

NB ½" SCH. 10S (MATERIAL: SS304L)

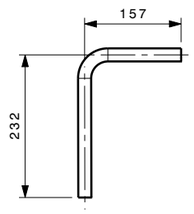


Front view
Scale: 1:10

Isometric view
Scale: 1:10

## 4.4 : NITROGEN SUPPLY BRANCH-4

NB ½" SCH. 10S (MATERIAL: SS304L)

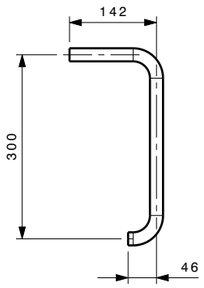


Front view
Scale: 1:10

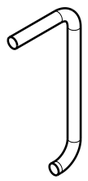

Isometric view
Scale: 1:10

## 4.2 : NITROGEN SUPPLY BRANCH-2

NB ½" SCH. 10S (MATERIAL: SS304L)

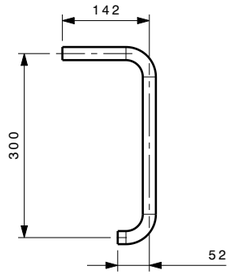


Front view
Scale: 1:10

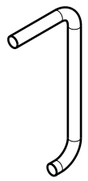

Isometric view
Scale: 1:10

## 4.3 : NITROGEN SUPPLY BRANCH-3

NB ½" SCH. 10S (MATERIAL: SS304L)

NOTE*
1. ALL DIMENSIONS ARE IN MM.
2. METALIC BRAIDED HOSES MAY BE USED AS PER REQUIREMENT IN THE BRANCH LINE.

| | | | | | | | | | | | | | | | |
|---|---|---|---|---|---|---|---|---|---|---|---|---|---|---|---|
| DRG.NO | ▽ 8-25 | ▽▽ 1.6-8 | ▽▽▽ 0.025-1.6 | ▽▽▽▽ < 0.025 | | | | | | | | | | | |
| CO-ORDINATED BY | | | | | | | | | | | | | | | |
| MACHINING DEVIATIONS FOR NON-TOLERANCED DIMENSIONS | | | | | | | | | | | | | | | |
| LENGTH IN mm OF SHORTER SIDE OF ANGLES | | | | LENGTH OR DIA | UPTO 6 | 6-30 | 30-120 | 120-315 | | | | | | | |
| UPTO 10 | 10-50 | 50-120 | OVER 120-400 | | | | | | | | | | | | |
| ±1° | ±0°-30' | ±0°-20' | ±0°-10' | | ±0.1 | ±0.2 | ±0.3 | ±0.5 | | | | | | | |

REVISION COLUMN

| REV | ZONE | DESCRIPTION | DATE | REMARKS | APPROVED BY |
|---|---|---|---|---|---|
| | | | | | |

| | | | | | |
|---|---|---|---|---|---|
| NBI GROUP: | | SIZE A3 | INSTITUTE FOR PLASMA RESEARCH<br>BHAT, GANDHINAGAR-382 428. | | |
| ALL DIMENSIONS ARE IN `mm' UNLESS OTHERWISE STATED | | | | | |
| SCALE | NTS | DATE | THIRD ANGLE PROJECTION | TITLE<br>NITROGEN SUPPLY HEADER DETAILS | |
| DRAWN | A.R.K. | | | | |
| CHECKED | | | REF DRG NO: | | REV 00 |
| APPROVED | | | DRG.NO | 2.04.02.034 | SHEET 5 OF 6 |

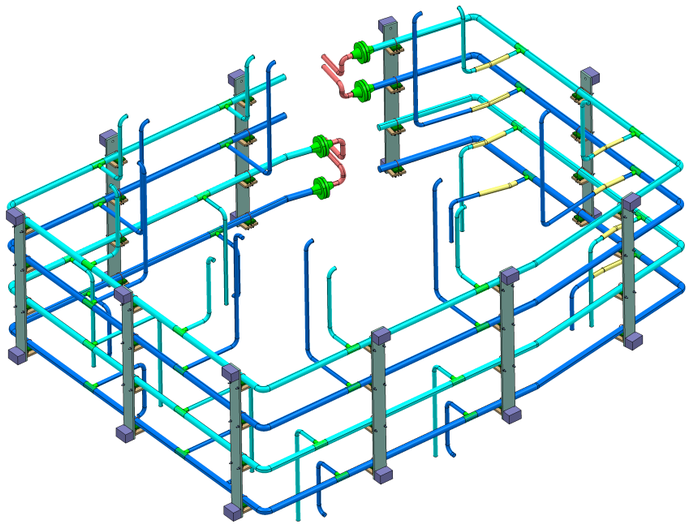

Isometric view
Scale: 1:30

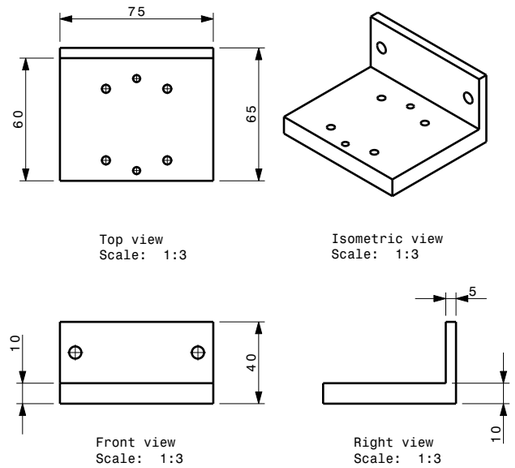


Top view
Scale: 1:3

Isometric view
Scale: 1:3

Front view
Scale: 1:3

Right view
Scale: 1:3

## 3. SUPPORT BRACKET

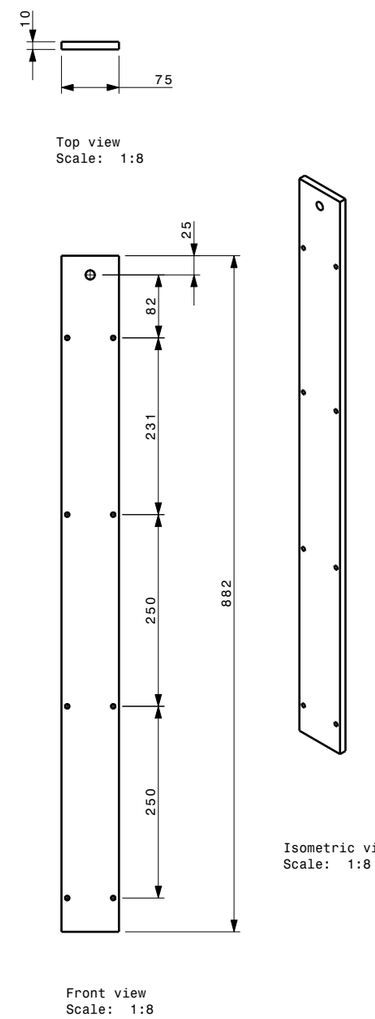


Top view
Scale: 1:8

Isometric view
Scale: 1:8

Front view
Scale: 1:8

## 2. SUPPORT PLATE

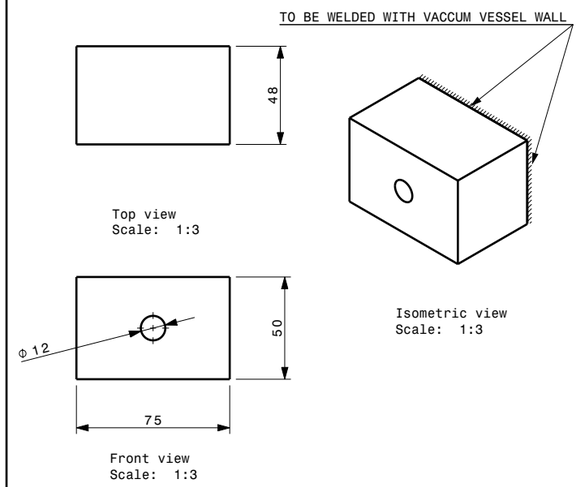


Top view
Scale: 1:3

Isometric view
Scale: 1:3

Front view
Scale: 1:3

## 1. SS BLOCK

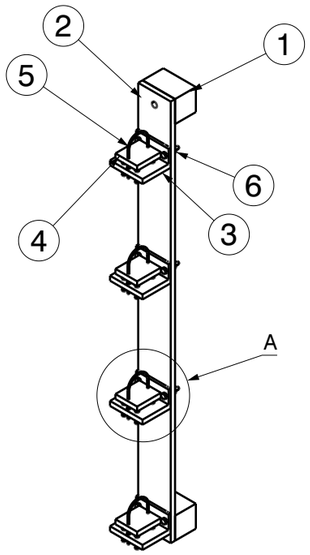


Isometric view
Scale: 1:10

QTY:-10

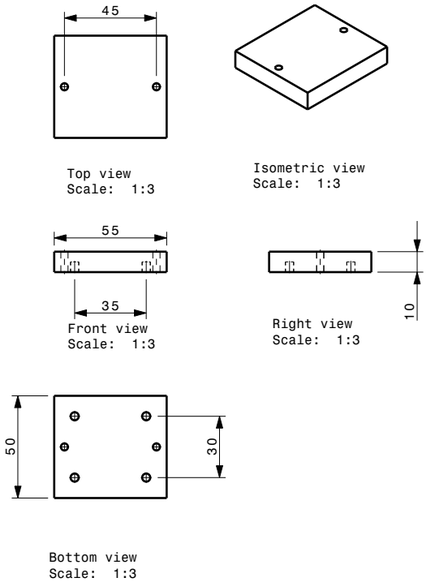


Top view
Scale: 1:3

Isometric view
Scale: 1:3

Front view
Scale: 1:3

Right view
Scale: 1:3

Bottom view
Scale: 1:3

## 4. G10 SUPPORT

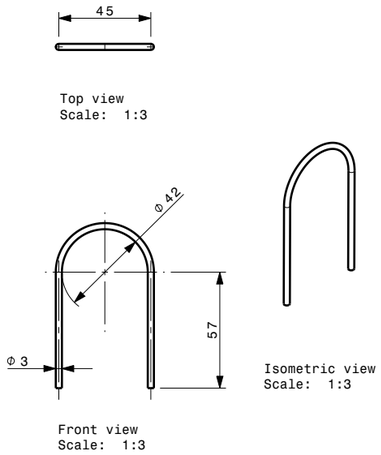


Top view
Scale: 1:3

Isometric view
Scale: 1:3

Front view
Scale: 1:3

## 5. CLAMP

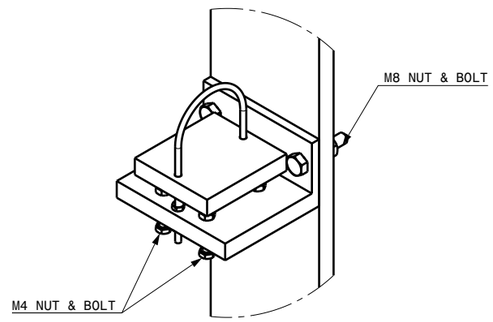


Detail A
Scale: 1:3

NOTE:-
PROCUREMENT/FABRICATION OF ALL REQUIRED MATERIAL AS LISTED IN BOM IS UNDER THE SCOPE OF SUPPLIER/VENDOR.

| SR.NO. | DESCRIPTION | MATERIAL | QTY. |
|---|---|---|---|
| 6 | FASTENERS | SS 304 | AS PER REQ. |
| 5 | CLAMPS WITH NUT | SS 304 L | 40 |
| 4 | G10 SUPPORT | FRP G10 | 40 |
| 3 | SUPPORT BRACKET | SS 304 L | 40 |
| 2 | SUPPORT PLATE | SS 304 L | 10 |
| 1 | SS BLOCK | SS 304 L | 20 |

| DRG.NO | ▽ 8-25 | ▽▽ 1.6-8 | ▽▽▽ 0.025-1.6 | ▽▽▽▽ < 0.025 |
|---|---|---|---|---|
| CO-ORDINATED BY | | | | |

MACHINING DEVIATIONS FOR NON-TOLERANCED DIMENSIONS

| LENGTH IN mm OF SHORTER SIDE OF ANGLES | | | | LENGTH OR DIA | UPTO 6 | 6-30 | 30-120 | 120-315 |
|---|---|---|---|---|---|---|---|---|
| UPTO 10 | 10-50 | 50-120 | OVER 120-400 | | | | | |
| ±1° | ±0°-30' | ±0°-20' | ±0°-10' | | ±0.1 | ±0.2 | ±0.3 | ±0.5 |

REVISION COLUMN

| REV | ZONE | DESCRIPTION | DATE | REMARKS | APPROVED BY |
|---|---|---|---|---|---|
| | | | | | |

NBI GROUP: | SIZE A3

ALL DIMENSIONS ARE IN `mm' UNLESS OTHERWISE STATED

| SCALE | NTS | DATE |
|---|---|---|
| DRAWN | A.R.K. | |
| CHECKED | | |
| APPROVED | | |

THIRD ANGLE PROJECTION

INSTITUTE FOR PLASMA RESEARCH
BHAT, GANDHINAGAR-382 428.

TITLE
CRYOGENIC_HEADER_SUPPORTS_DETAIL

REF DRG NO:

REV 00

DRG.NO 2.04.02.034

SHEET 6 OF 6

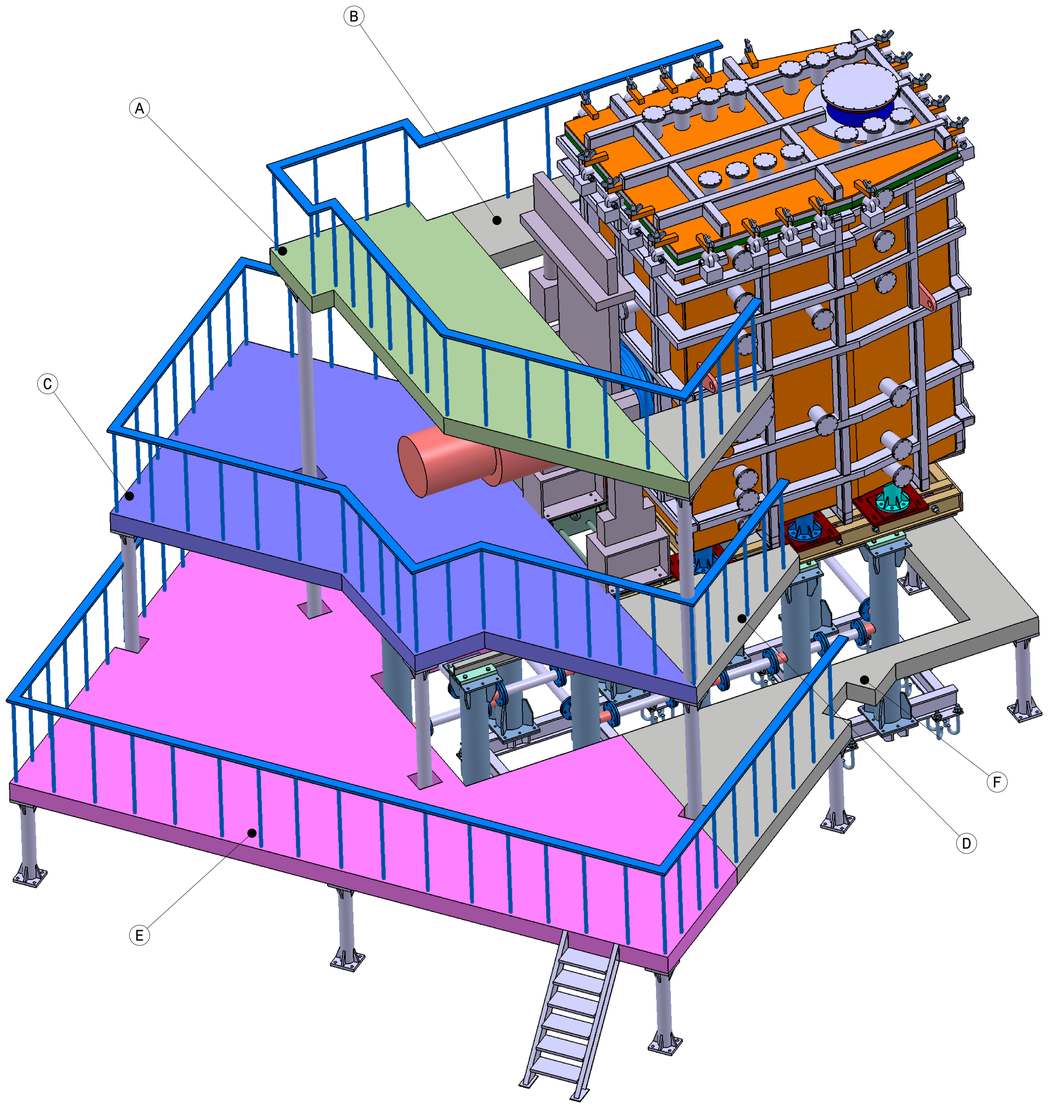


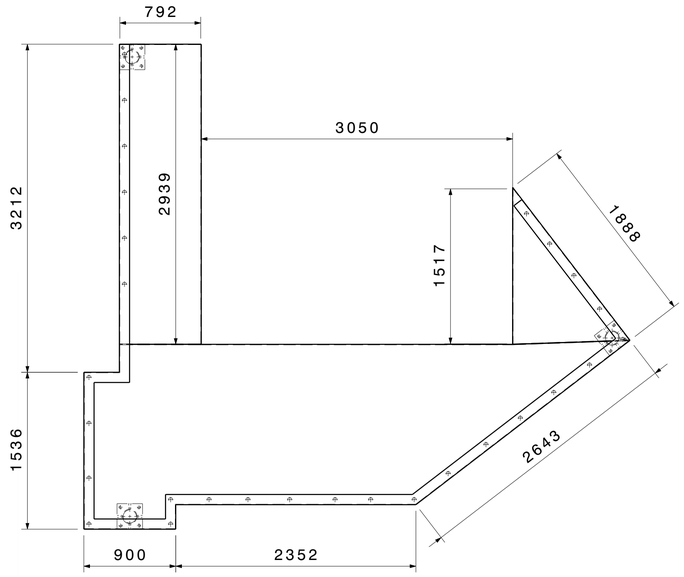


Top view
Scale: 1:30

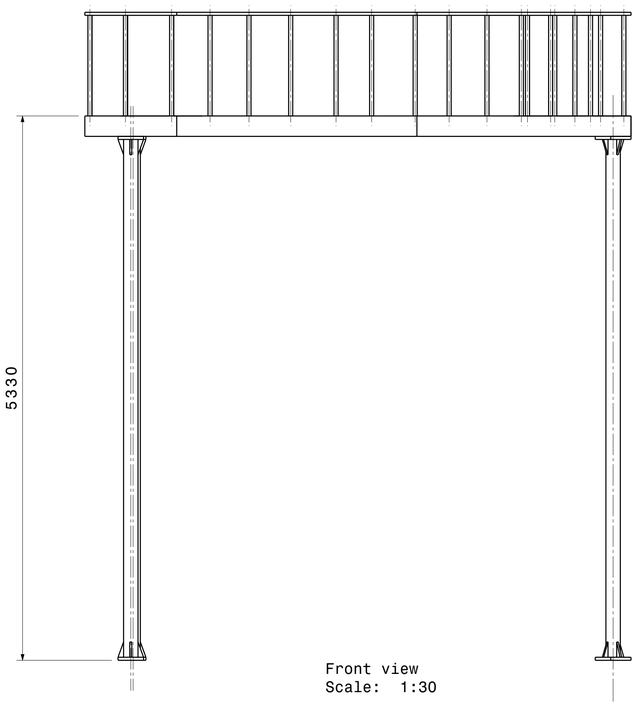


Front view
Scale: 1:30

**NOTE***

**1. THIS SYSTEM IS ENTIRELY UNDER THE VENDOR'S SCOPE OF SUPPLY.**

| PART NO. | DESCRIPTION | MATERIAL | QTY. | REMARKS |
|---|---|---|---|---|
| A | PLATFORM-1.1 | IS 2062 | 1 | |
| B | PLATFORM-1.2 | SS 304 | 1 | |
| C | PLATFORM-2.1 | IS 2062 | 1 | |
| D | PLATFORM-2.2 | SS 304 | 1 | |
| E | PLATFORM-3.1 | IS 2062 | 1 | |
| F | PLATFORM-3.2 | SS 304 | 1 | |

PLATFORM-1.1 & 1.2

| | | | | |
|---|---|---|---|---|
| DRG.NO | ▽ 8-25 | ▽▽ 1.6-8 | ▽▽▽ 0.025-1.6 | ▽▽▽▽ < 0.025 |
| CO-ORDINATED BY | | | | |
| MACHINING DEVIATIONS FOR NON-TOLERANCED DIMENSIONS | | | | |
| LENGTH IN mm OF SHORTER SIDE OF ANGLES | | | | |
| UPTO 10 | 10-50 | 50-120 | OVER 120-400 | |
| ±1' | ±0'-30' | ±0'-20' | ±0'-10' | |

| LENGTH OR DIA | UPTO 6 | 6-30 | 30-120 | 120-315 |
|---|---|---|---|---|
| | ±0.1 | ±0.2 | ±0.3 | ±0.5 |

| REVISION COLUMN | | | | | |
|---|---|---|---|---|---|
| REV | ZONE | DESCRIPTION | DATE | REMARKS | APPROVED BY |
| | | | | | |
| | | | | | |
| | | | | | |

| | | | |
|---|---|---|---|
| NBI GROUP: | | SIZE A3 | INSTITUTE FOR PLASMA RESEARCH BHAT, GANDHINAGAR-382 428. |
| ALL DIMENSIONS ARE IN 'mm' UNLESS OTHERWISE STATED | | | |
| SCALE | - | DATE | TITLE 3-TIER WORKING PLATFORM ASSY. |
| DRAWN | ARK | | THIRD ANGLE PROJECTION |
| DESIGNED | | | REF DRG NO: REV R0 |
| APPROVED | | | DRG.NO 2.04.02.035 SHEET 01 OF 02 |

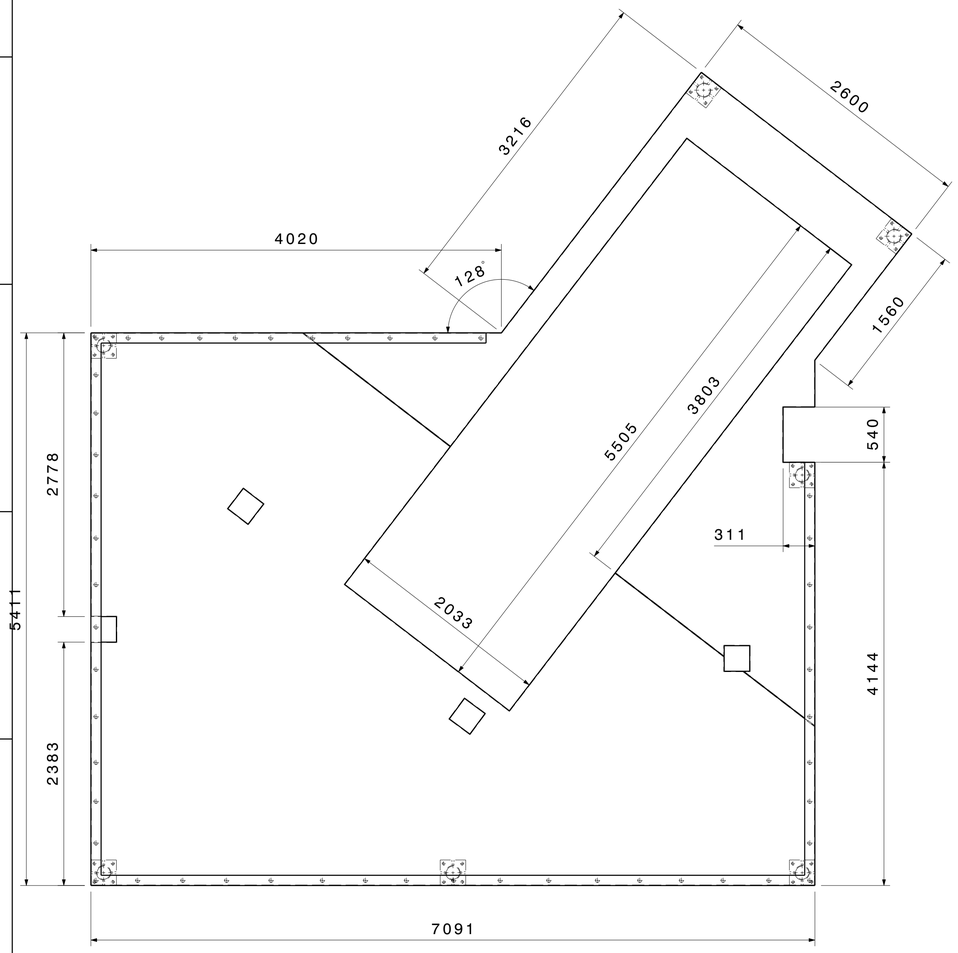


Top view
Scale: 1:30

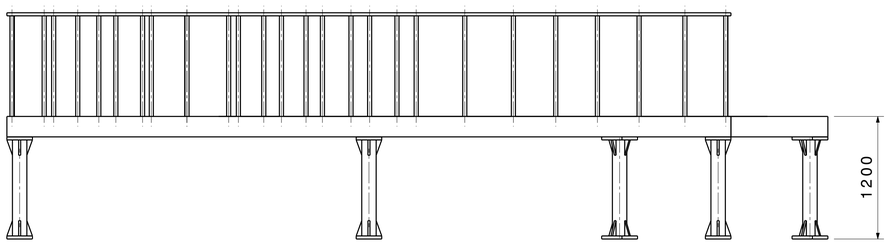


Front view
Scale: 1:30

## PLATFORM-3.1 & 3.2

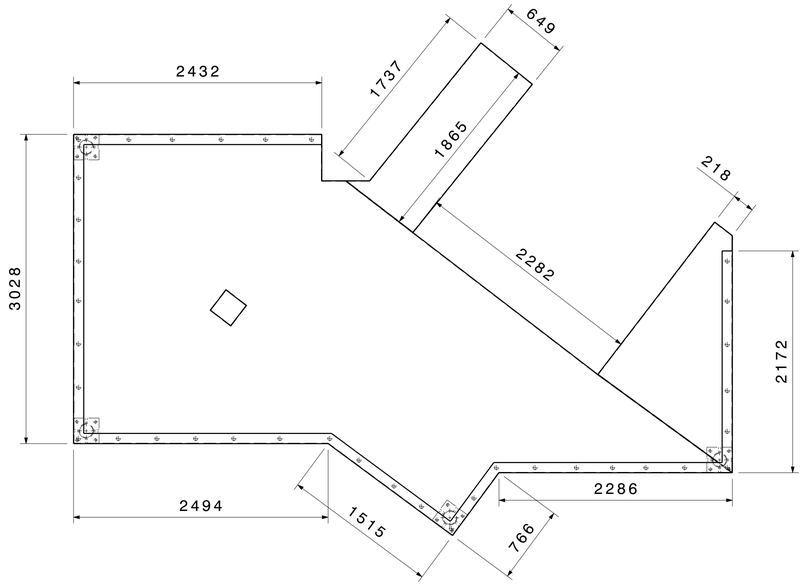


Top view
Scale: 1:30

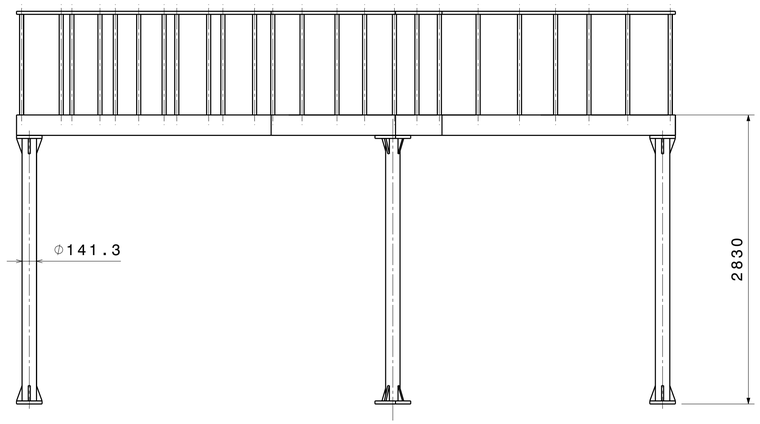


Front view
Scale: 1:30

## PLATFORM-2.1 & 2.2

| | | | | | | | | | | | | | | | | | |
|---|---|---|---|---|---|---|---|---|---|---|---|---|---|---|---|---|---|
| DRG.NO | ▽ 8-25 | ▽▽ 1.6-8 | ▽▽▽ 0.025-1.6 | ▽▽▽▽ < 0.025 | | | | | | | | | | | | | |
| CO-ORDINATED BY | | | | | | | | | | | | | | | | | |
| MACHINING DEVIATIONS FOR NON-TOLERANCED DIMENSIONS | | | | | | | | | | | | | | | | | |
| LENGTH IN mm OF SHORTER SIDE OF ANGLES | | | | | LENGTH OR DIA | UPTO 6 | 6-30 | 30-120 | 120-315 | | | | | | | | |
| UPTO 10 | 10-50 | 50-120 | OVER 120-400 | | | | | | | | | | | | | | |
| ±1° | ±0°-30' | ±0°-20' | ±0°-10' | | | ±0.1 | ±0.2 | ±0.3 | ±0.5 | | | | | | | | |

| REVISION COLUMN | | | | | |
|---|---|---|---|---|---|
| REV | ZONE | DESCRIPTION | DATE | REMARKS | APPROVED BY |
| | | | | | |
| | | | | | |
| | | | | | |
| | | | | | |

| | | | |
|---|---|---|---|
| NBI GROUP: | | SIZE A3 | INSTITUTE FOR PLASMA RESEARCH |
| ALL DIMENSIONS ARE IN mm UNLESS OTHERWISE STATED | | | BHAT, GANDHINAGAR-382 428. |
| SCALE | - | DATE | THIRD ANGLE PROJECTION |
| DRAWN | ARK | | TITLE 3-TIER WORKING PLATFORM DETAILS |
| DESIGNED | | | REF DRG NO: REV R0 |
| APPROVED | | | DRG.NO 2.04.02.035 SHEET 02 OF 02 |

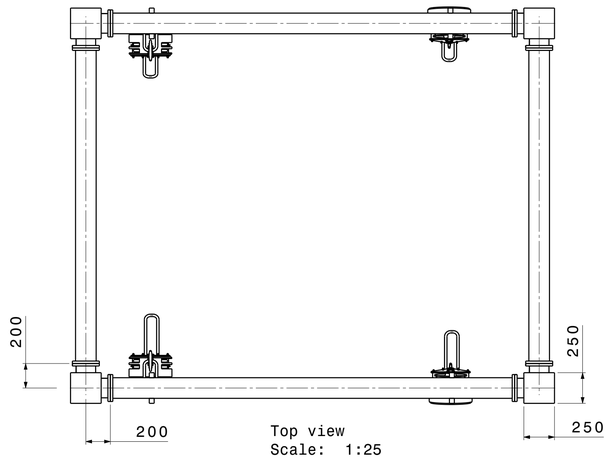


Top view
Scale: 1:25

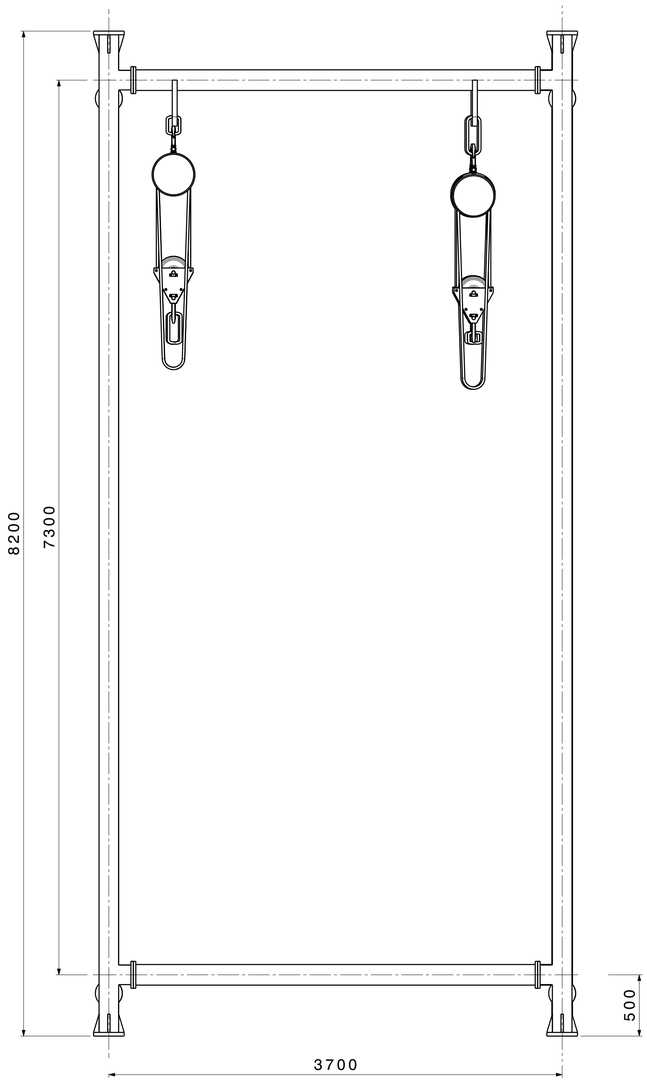


Front view
Scale: 1:25

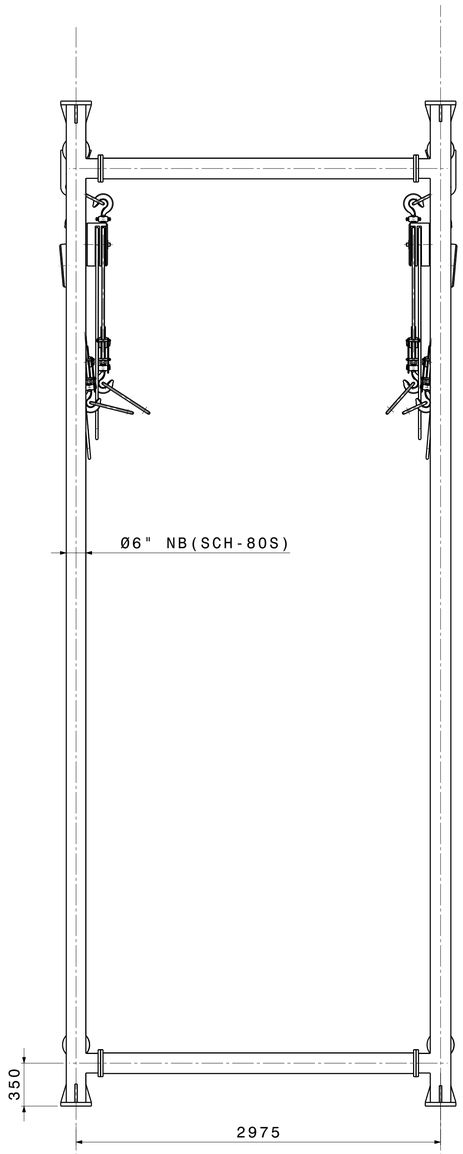


Right view
Scale: 1:25

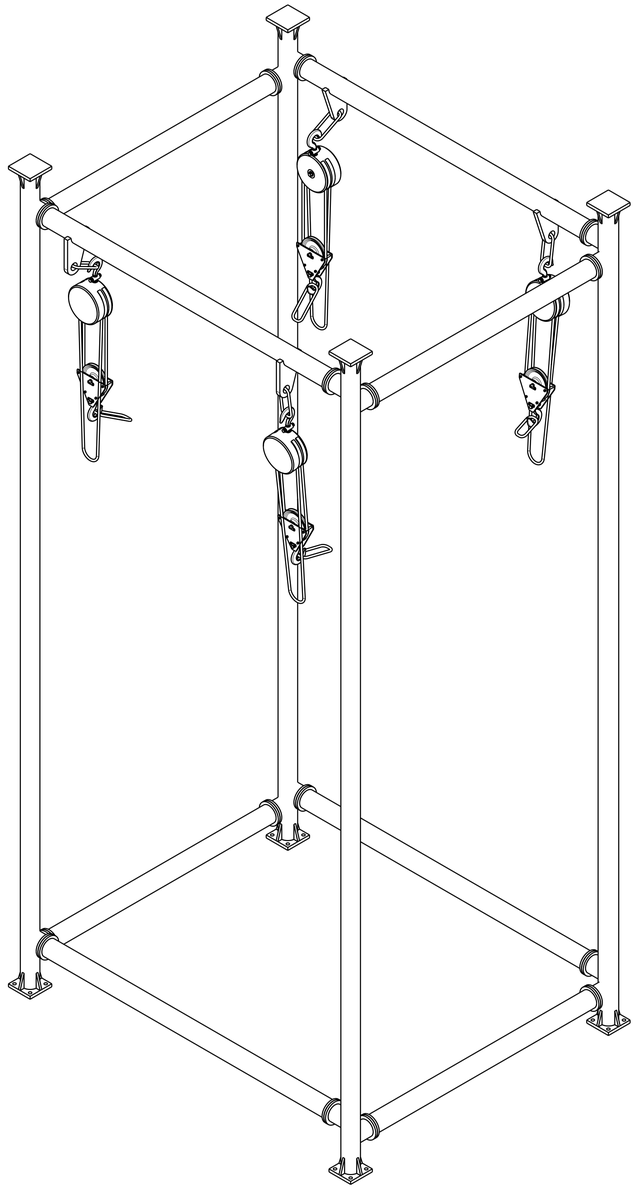

Isometric view
Scale: 1:25

**NOTE***

**1. THIS SYSTEM IS ENTIRELY UNDER THE VENDOR'S SCOPE OF SUPPLY.**

| PART NO. | DESCRIPTION | MATERIAL | QTY. | REMARKS |
|---|---|---|---|---|
| 1 | PIPE | IS 2062 | AS PER REQ. | |
| 2 | ANCHOR BOLTS | IS 2062 | AS PER REQ. | |

| DRG.NO | ▽ 8-25 | ▽▽ 1.6-8 | ▽▽▽ 0.025-1.6 | ▽▽▽▽ < 0.025 |
|---|---|---|---|---|
| CO-ORDINATED BY | | | | |

MACHINING DEVIATIONS FOR NON-TOLERANCED DIMENSIONS

| LENGTH IN mm OF SHORTER SIDE OF ANGLES | | | | LENGTH OR DIA | UPTO 6 | 6-30 | 30-120 | 120-315 |
|---|---|---|---|---|---|---|---|---|
| UPTO 10 | 10-50 | 50-120 | OVER 120-400 | | | | | |
| ±1' | ±0'-30' | ±0'-20' | ±0'-10' | | ±0.1 | ±0.2 | ±0.3 | ±0.5 |

REVISION COLUMN

| REV | ZONE | DESCRIPTION | DATE | REMARKS | APPROVED BY |
|---|---|---|---|---|---|
| | | | | | |
| | | | | | |
| | | | | | |

| | | | |
|---|---|---|---|
| NBI GROUP: | | SIZE A3 | INSTITUTE FOR PLASMA RESEARCH BHAT, GANDHINAGAR-382 428. |
| ALL DIMENSIONS ARE IN 'mm' UNLESS OTHERWISE STATED | | | |
| SCALE | - | DATE | TITLE VACCUM VESSEL(VV) LIFTING STRUCTURE CONCEPT |
| DRAWN | ARK | | THIRD ANGLE PROJECTION |
| DESIGNED | | | REF DRG NO: REV R0 |
| APPROVED | | | DRG.NO 2.04.02.036 SHEET 01 OF 01 |

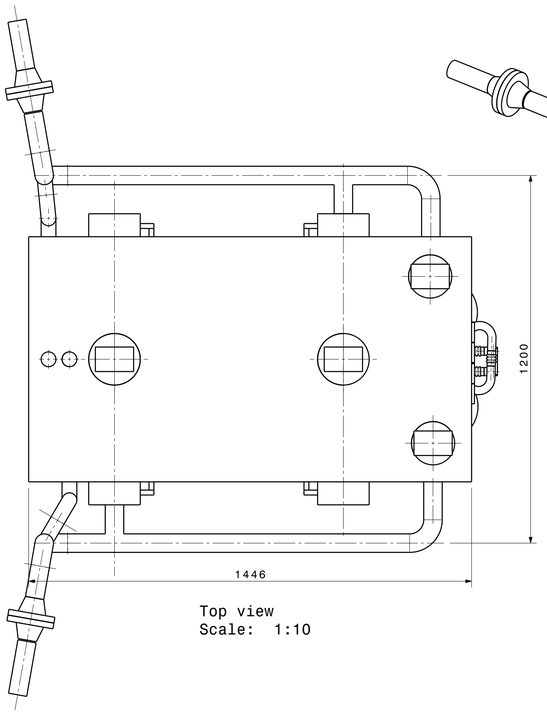


Top view
Scale: 1:10

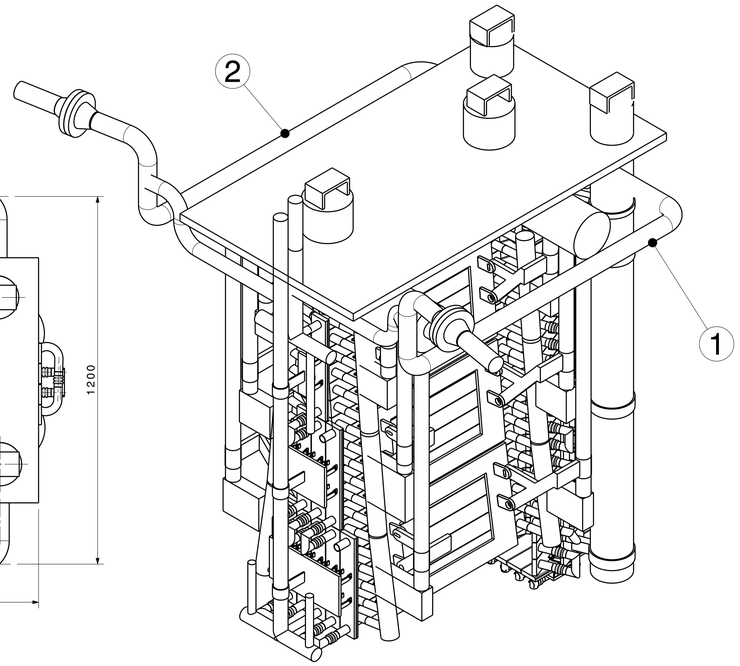


Isometric view
Scale: 1:10

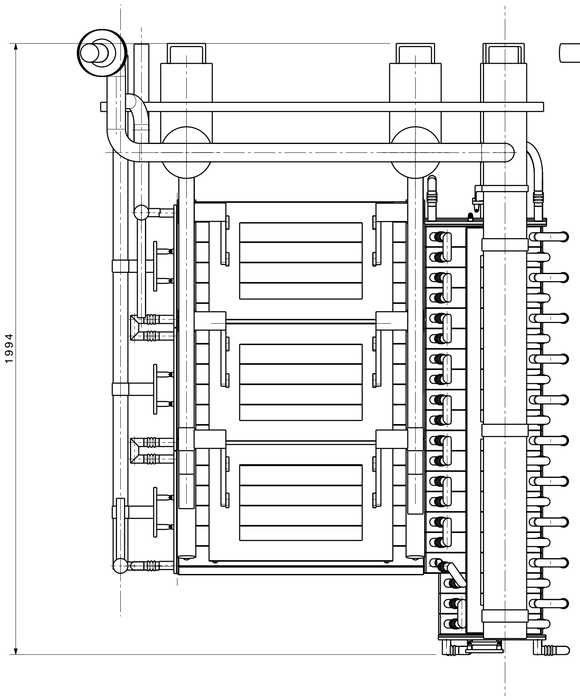


Front view
Scale: 1:10

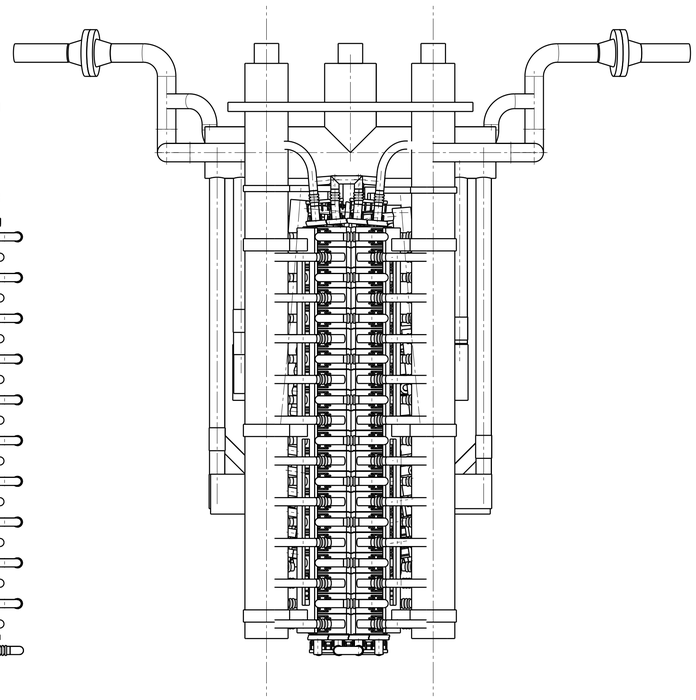

Right view
Scale: 1:10

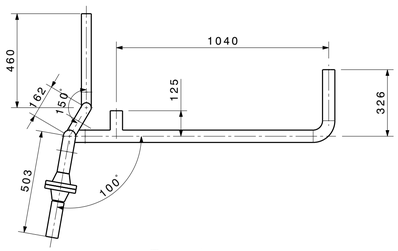


Top view
Scale: 1:15

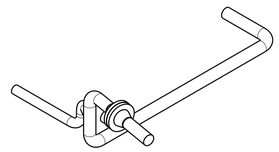

Isometric view
Scale: 1:15

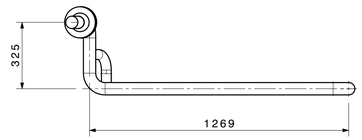


Front view
Scale: 1:15

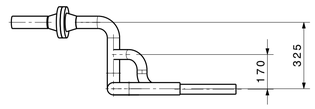


Right view
Scale: 1:15

## 1 .INLET

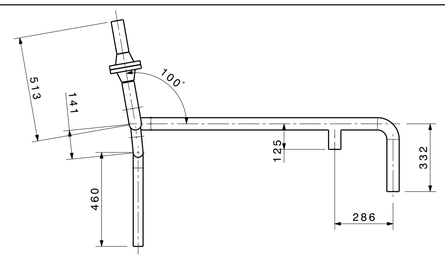


Top view
Scale: 1:15

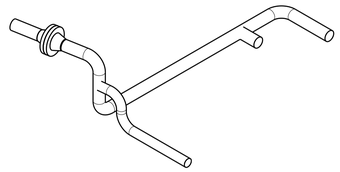

Isometric view
Scale: 1:15

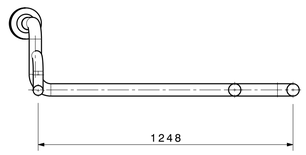


Front view
Scale: 1:15

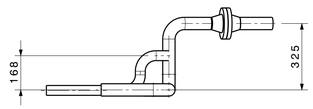


Right view
Scale: 1:15

## 2 .OUTLET

| NOTE: | |
|---|---|
| 1 | 3D MODEL SHOWN IN THIS SHEET IS FOR THE SAKE OF UNDERSTANDING ONLY FOR THE VENDORS. |
| 2 | THE SCOPE OF SUPPLY FROM THE VENDOR IS AS LISTED IN THE BOM. |
| 3 | ALL PIPES ARE OF SCH.10S. |
| 4 | REQUIRED PIPES & BENDS ARE FREE ISSUE OF MATERIAL. |

| | | | | | | | | | | | | | | | | | |
|---|---|---|---|---|---|---|---|---|---|---|---|---|---|---|---|---|---|
| DRG.NO | ▽ 8-25 | ▽▽ 1.6-8 | ▽▽▽ 0.025-1.6 | ▽▽▽▽ < 0.025 | | | | | | | | | | | | | |
| CO-ORDINATED BY | | | | | | | | | | | | | | | | | |
| MACHINING DEVIATIONS FOR NON-TOLERANCED DIMENSIONS | | | | | | | | | | | | | | | | | |
| LENGTH IN mm OF SHORTER SIDE OF ANGLES | | | | | LENGTH OR DIA | UPTO 6 | 6-30 | 30-120 | 120-315 | | | | | | | | |
| UPTO 10 | 10-50 | 50-120 | OVER 120-400 | | | | | | | | | | | | | | |
| ±1' | ±0°-30' | ±0°-20' | ±0°-10' | | | ±0.1 | ±0.2 | ±0.3 | ±0.5 | | | | | | | | |

| REV | ZONE | DESCRIPTION | DATE | REMARKS | APPROVED BY |
|---|---|---|---|---|---|
| | | | | | |
| | | | | | |
| | | | | | |

REVISION COLUMN

| | | | |
|---|---|---|---|
| NBI GROUP: | | SIZE A3 | INSTITUTE FOR PLASMA RESEARCH BHAT, GANDHINAGAR-382 428. |
| ALL DIMENSIONS ARE IN 'mm' UNLESS OTHERWISE STATED | | | |
| SCALE | - | DATE | THIRD ANGLE PROJECTION |
| DRAWN | ARK | - | TITLE ION DUMP ASSY. |
| DESIGNED | | | REF DRG NO: REV R0 |
| APPROVED | | | DRG.NO 2.04.02.037 SHEET 01 OF 01 |

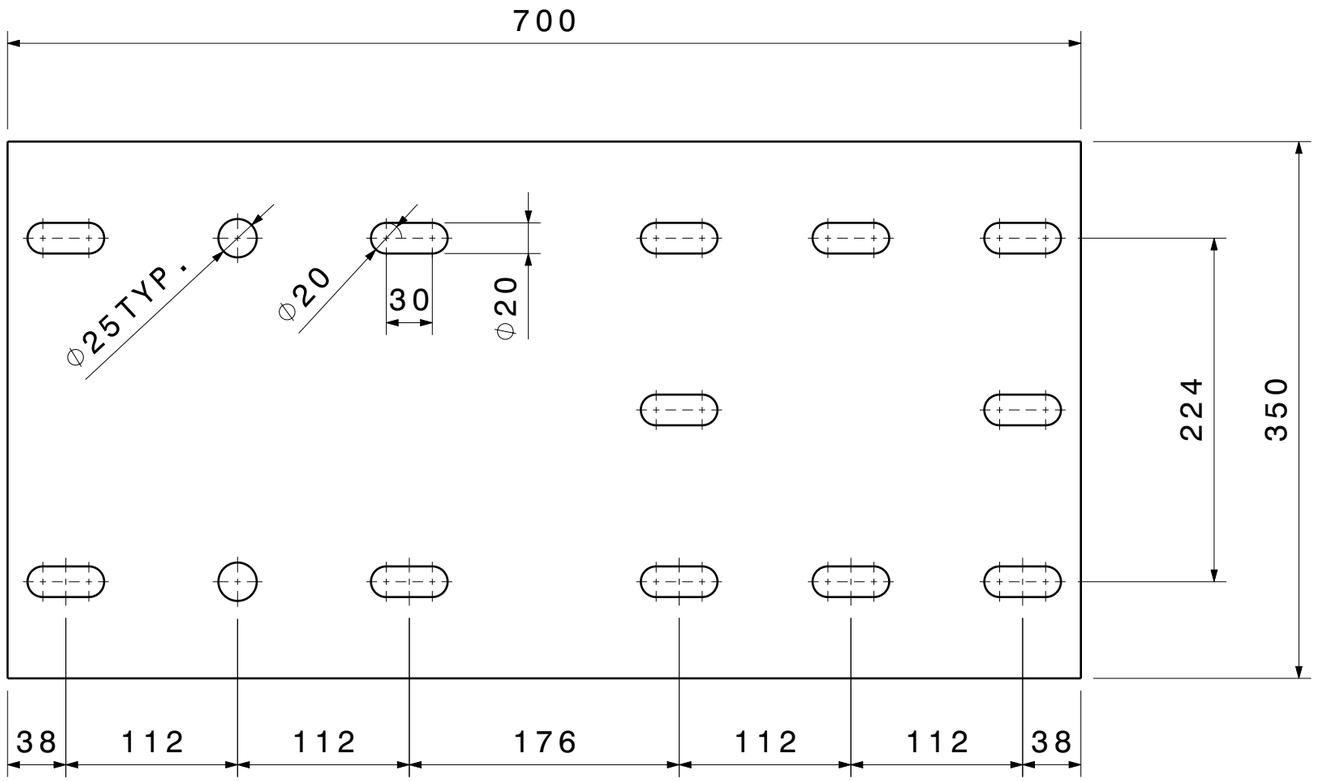


Top view
Scale: 1:4

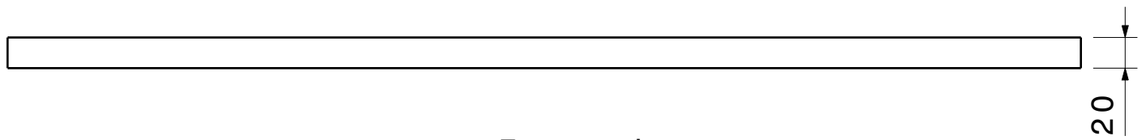


Front view
Scale: 1:4

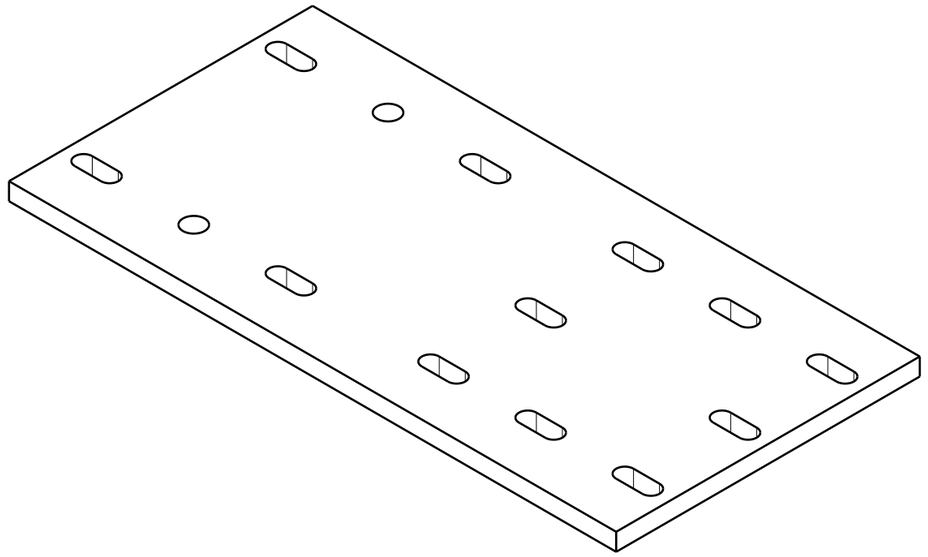

Isometric view
Scale: 1:5

| NOTE: | |
|---|---|
| 1 | MATERIAL PROCUREMENT, MACHINING AND WELDING OF THESE ARE IN THE SCOPE OF WORK. |
| 2 | WELDING IS IN THE SCOPE OF VENDOR TO THE EXISTING SUPPORT STRUCUTURE IN THE TESTSTAND AREA. |
| 3 | REQUIRED NOS. OF PEDESTALS = 04 NOS. MATERIAL = SS 304 |

| DRG.NO | ▽ 8-25 | ▽▽ 1.6-8 | ▽▽▽ 0.025-1.6 | ▽▽▽▽ < 0.025 |
|---|---|---|---|---|
| CO-ORDINATED BY | | | | |

MACHINING DEVIATIONS FOR NON-TOLERANCED DIMENSIONS

| LENGTH IN mm OF SHORTER SIDE OF ANGLES | | | | LENGTH OR DIA | UPTO 6 | 6-30 | 30-120 | 120-315 |
|---|---|---|---|---|---|---|---|---|
| UPTO 10 | 10-50 | 50-120 | OVER 120-400 | | | | | |
| ±1° | ±0°-30' | ±0°-20' | ±0°-10' | | ±0.1 | ±0.2 | ±0.3 | ±0.5 |

REVISION COLUMN

| REV | ZONE | DESCRIPTION | DATE | REMARKS | APPROVED BY |
|---|---|---|---|---|---|
| | | | | | |

| NBI GROUP: | SIZE A3 |
|---|---|
| ALL DIMENSIONS ARE IN `mm' UNLESS OTHERWISE STATED | |

INSTITUTE FOR PLASMA RESEARCH
BHAT, GANDHINAGAR-382 428.

| SCALE | NTS | DATE |
|---|---|---|
| DRAWN | A.R.K. | |
| CHECKED | | |
| APPROVED | | |

THIRD ANGLE PROJECTION

TITLE: VV-1 PEDESTALS

REF DRG NO:

REV 00

DRG.NO 2.04.02.038

SHEET 01 OF 01

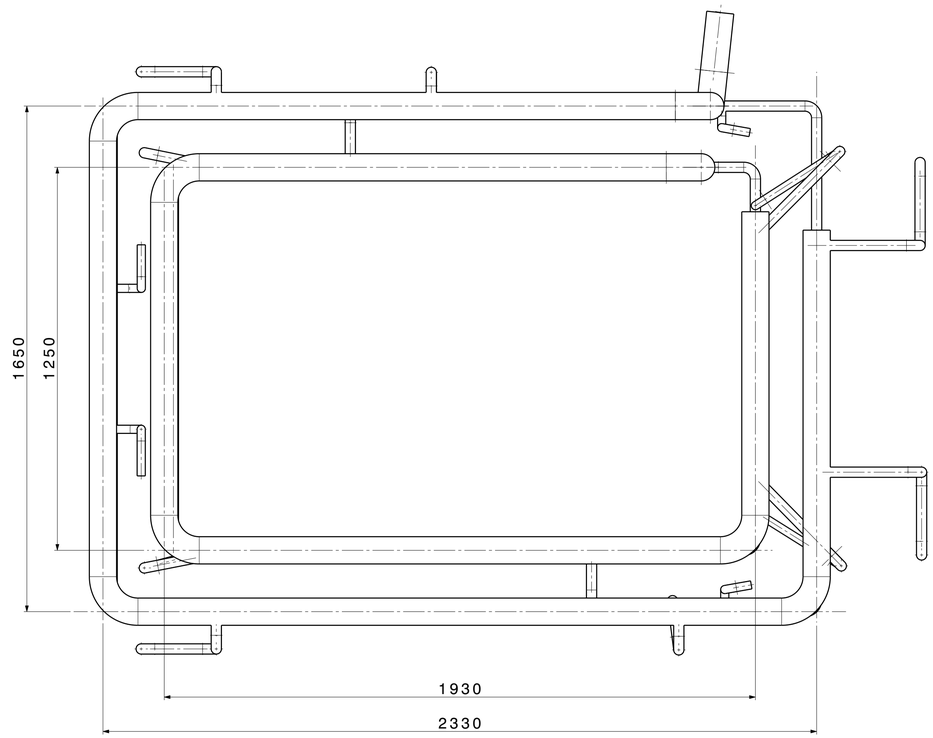


TOP VIEW

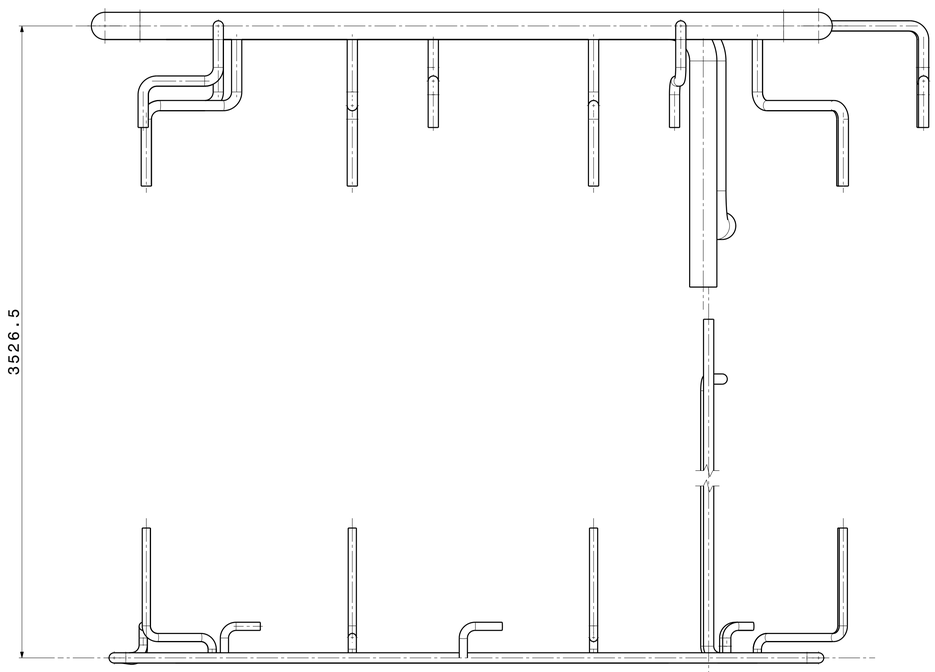


FRONT VIEW

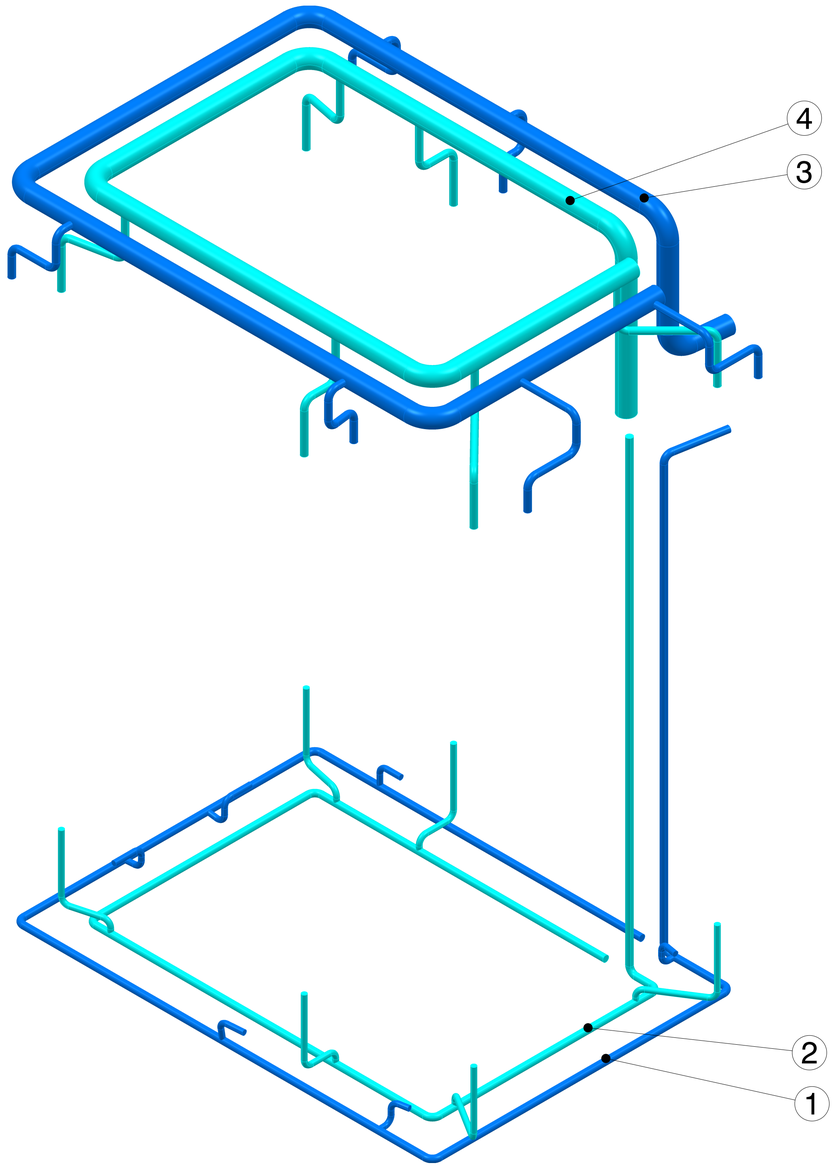


ISOMETRIC VIEW

| PART NO. | DESCRIPTION | QTY. |
|---|---|---|
| 1 | NITROGEN SUPPLY HEADER | 1 |
| 2 | HELIUM SUPPLY HEADER | 1 |
| 3 | NITROGEN RETURN HEADER | 1 |
| 4 | HELIUM RETURN HEADER | 1 |

NOTE:-
1. ALL THE REQUIRED PIPES STANDARD BENDS WILL BE GIVEN AS FREE ISSUE MATERIAL.

| DRG.NO | ▽ 8-25 | ▽▽ 1.6-8 | ▽▽▽ 0.025-1.6 | ▽▽▽▽ < 0.025 |
|---|---|---|---|---|
| CO-ORDINATED BY | | | | |

MACHINING DEVIATIONS FOR NON-TOLERANCED DIMENSIONS

| LENGTH IN mm OF SHORTER SIDE OF ANGLES | | | | LENGTH OR DIA | UPTO 6 | 6-30 | 30-120 | 120-315 |
|---|---|---|---|---|---|---|---|---|
| UPTO 10 | 10-50 | 50-120 | OVER 120-400 | | | | | |
| ±1' | ±0°-30' | ±0°-20' | ±0°-10' | | ±0.1 | ±0.2 | ±0.3 | ±0.5 |

REVISION COLUMN

| REV | ZONE | DESCRIPTION | DATE | REMARKS | APPROVED BY |
|---|---|---|---|---|---|
| | | | | | |
| | | | | | |
| | | | | | |

| | | | |
|---|---|---|---|
| NBI GROUP: | | SIZE A3 | INSTITUTE FOR PLASMA RESEARCH BHAT, GANDHINAGAR-382 428. |
| ALL DIMENSIONS ARE IN mm UNLESS OTHERWISE STATED | | | |
| SCALE | - | DATE | THIRD ANGLE PROJECTION |
| DRAWN | ARK | | TITLE OPTION-2 NITROGEN & HELIUM HEADERS |
| DESIGNED | | | REF DRG NO: REV R0 |
| APPROVED | | | DRG.NO 2.04.02.039 SHEET 01 OF 03 |

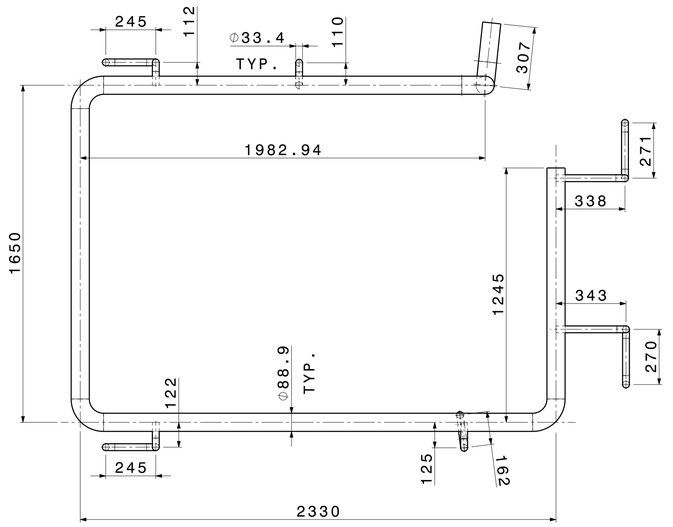


TOP VIEW

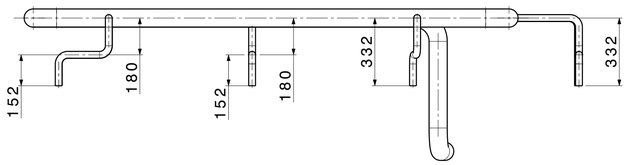


FRONT VIEW

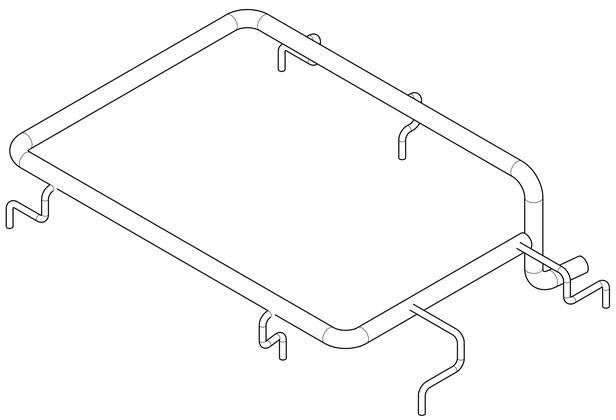

ISOMETRIC VIEW

# NITROGEN RETURN HEADER

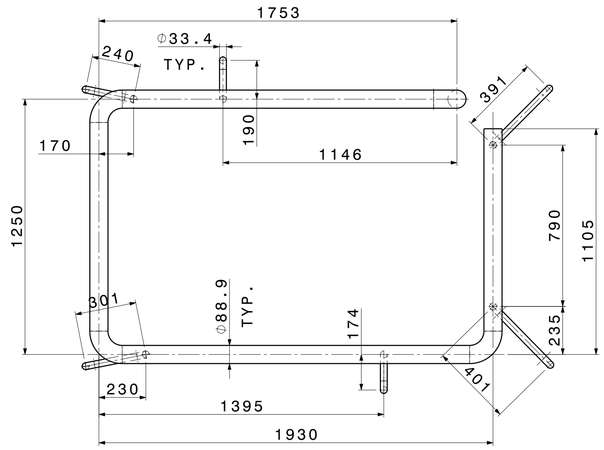


TOP VIEW

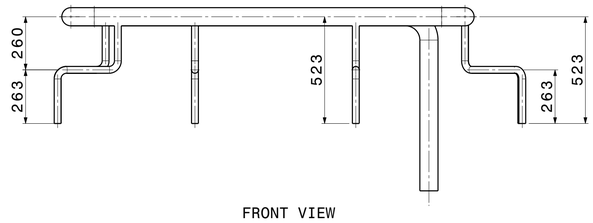


FRONT VIEW

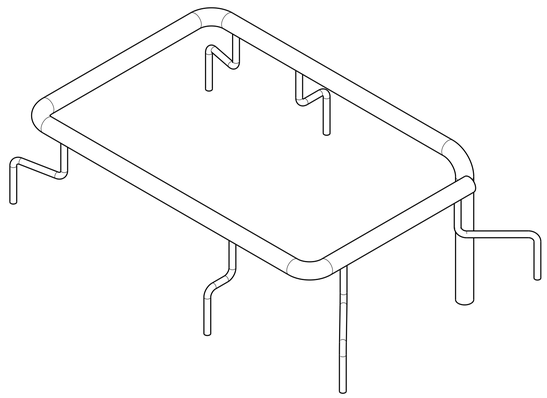

ISOMETRIC VIEW

# HELIUM RETURN HEADER

| DRG.NO | ▽ 8-25 | ▽▽ 1.6-8 | ▽▽▽ 0.025-1.6 | ▽▽▽▽ < 0.025 |
|---|---|---|---|---|
| CO-ORDINATED BY | | | | |
| MACHINING DEVIATIONS FOR NON-TOLERANCED DIMENSIONS | | | | |

| LENGTH IN mm OF SHORTER SIDE OF ANGLES | | | | LENGTH OR DIA | UPTO 6 | 6-30 | 30-120 | 120-315 |
|---|---|---|---|---|---|---|---|---|
| UPTO 10 | 10-50 | 50-120 | OVER 120-400 | | | | | |
| ±1' | ±0'-30' | ±0'-20' | ±0'-10' | | ±0.1 | ±0.2 | ±0.3 | ±0.5 |

| REV | ZONE | DESCRIPTION | DATE | REMARKS | APPROVED BY |
|---|---|---|---|---|---|
| | | | | | |
| | | | | | |
| | | | | | |
| | | | | | |

REVISION COLUMN

| | | |
|---|---|---|
| NBI GROUP: | SIZE A3 | |
| ALL DIMENSIONS ARE IN 'mm' UNLESS OTHERWISE STATED | | |
| SCALE | - | DATE |
| DRAWN | ARK | - |
| DESIGNED | | |
| APPROVED | | |

THIRD ANGLE PROJECTION

INSTITUTE FOR PLASMA RESEARCH
BHAT, GANDHINAGAR-382 428.

TITLE
OPTION-2
NITROGEN & HELIUM HEADERS

REF DRG NO:

REV R0

DRG.NO 2.04.02.039

SHEET 02 OF 03

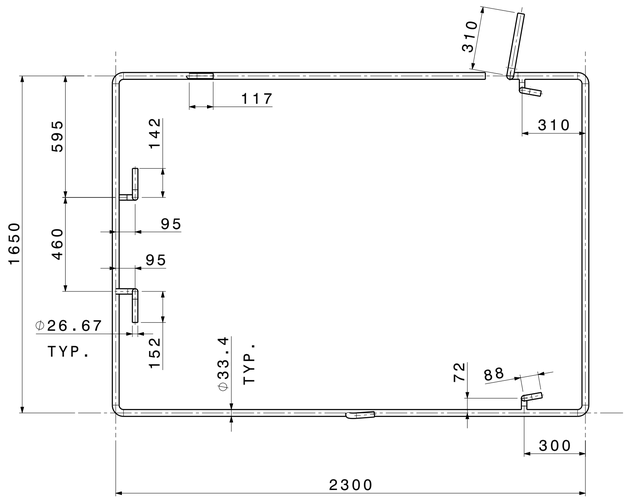


TOP VIEW

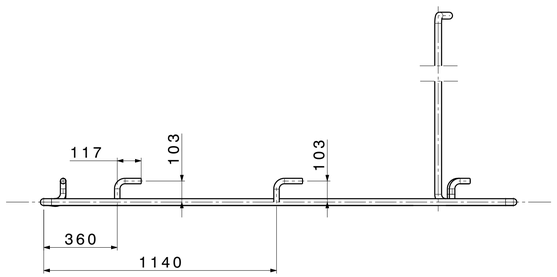


FRONT VIEW

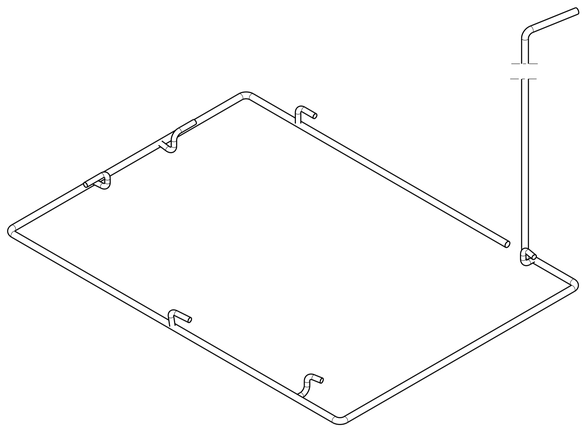

ISOMETRIC VIEW

## NITROGEN SUPPLY HEADER

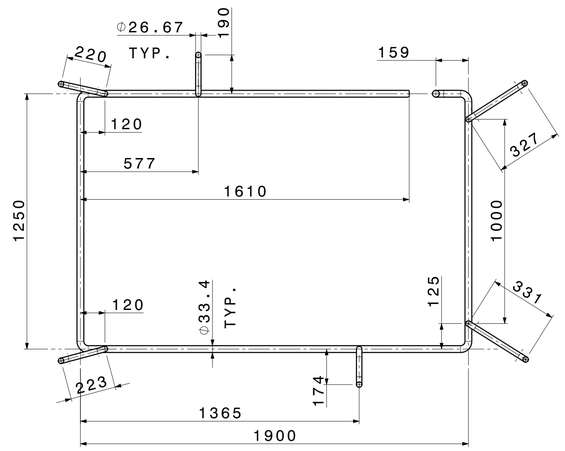


TOP VIEW

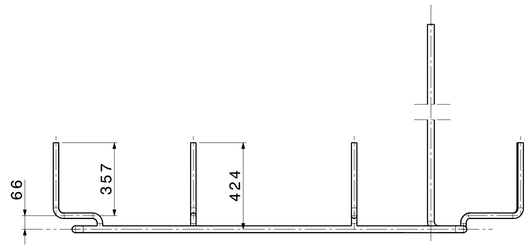


FRONT VIEW

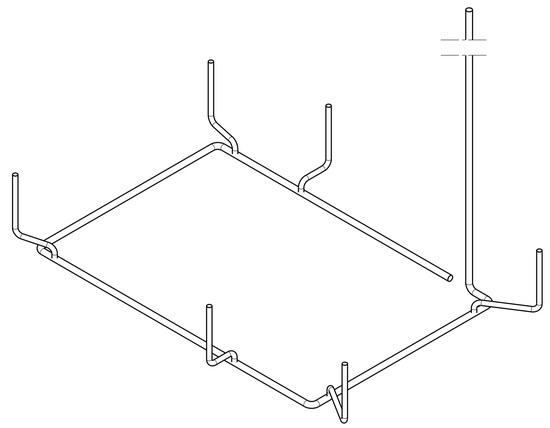

ISOMETRIC VIEW

## HELIUM SUPPLY HEADER

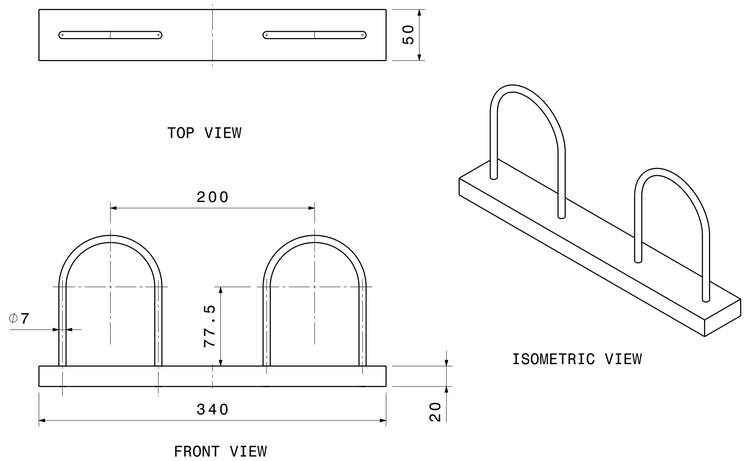


## SUPPORT CLAMP FOR HEADER-1 (SS304L)

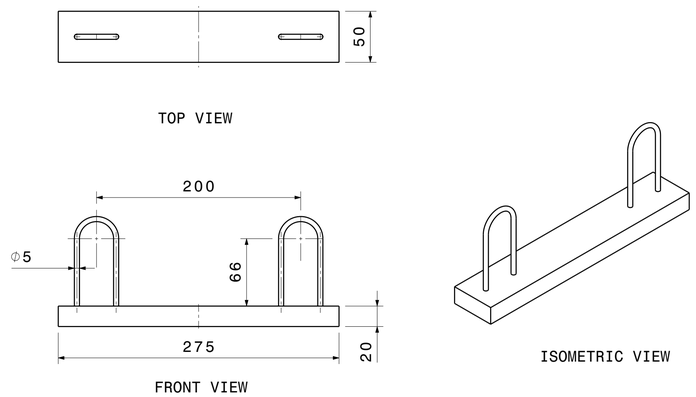


## SUPPORT CLAMP FOR HEADER-2 (SS304L)

NOTE:-
1. PLEASE NOTE THAT SUPPORT CLAMP FOR HEADER -1 & 2 ARE IN THE SCOPE OF SUPPLY.
2. REQUIRED QTY. 6 + 6

| DRG.NO | ▽ 8-25 | ▽▽ 1.6-8 | ▽▽▽ 0.025-1.6 | ▽▽▽▽ < 0.025 |
|---|---|---|---|---|
| CO-ORDINATED BY | | | | |

MACHINING DEVIATIONS FOR NON-TOLERANCED DIMENSIONS

| LENGTH IN mm OF SHORTER SIDE OF ANGLES | | | | LENGTH OR DIA | UPTO 6 | 6-30 | 30-120 | 120-315 |
|---|---|---|---|---|---|---|---|---|
| UPTO 10 | 10-50 | 50-120 | OVER 120-400 | | | | | |
| ±1° | ±0°-30' | ±0°-20' | ±0°-10' | | ±0.1 | ±0.2 | ±0.3 | ±0.5 |

| REVISION COLUMN | | | | | |
|---|---|---|---|---|---|
| REV | ZONE | DESCRIPTION | DATE | REMARKS | APPROVED BY |
| | | | | | |
| | | | | | |
| | | | | | |

| | | | |
|---|---|---|---|
| NBI GROUP: | | SIZE A3 | INSTITUTE FOR PLASMA RESEARCH BHAT, GANDHINAGAR-382 428. |
| ALL DIMENSIONS ARE IN 'mm' UNLESS OTHERWISE STATED | | | |
| SCALE | - | DATE | TITLE: OPTION-2 NITROGEN & HELIUM HEADERS |
| DRAWN | ARK | - | THIRD ANGLE PROJECTION |
| DESIGNED | | | REF DRG NO: REV R0 |
| APPROVED | | | DRG.NO 2.04.02.039 SHEET 03 OF 03 |